American Concrete Pipe Association

Indirect Design

Josh Beakley - ACPA
jbeakley@concretepipe.org

Outline

- What is Indirect Design?
- Installation Types
- Loads
- Bedding Factors
- D-Loads
- Arch and Elliptical Pipe
- Examples

AASHTO Section 12.10.1 General

- "The structural design of the types of pipes indicated above may proceed by either of two methods:
  - The direct design method at the strength limit state as specified in Article 12.10.4.2, or
  - The indirect design method at the service limit state as specified in Article 12.10.4.3."

Direct Design

Design Loads
Earth
Live
Fluid
Self

Design Forces
Moment
Thrust
Shear

Design

$$A_s \geq \frac{g\phi d - N_u - \sqrt{g\left[g(\phi d)^2 - N_u(2\phi d - h) - 2M_u\right]}}{f_y}$$

Pipe Requirements

TYPE A STANDARD INSTALLATION - STEEL AREAS (in.^{2}/ft.)

Dia.	Wall Thick.	f'c (psi)	Required Fill/Cover Height H<1.5'	1.5'≤H<2'	2'≤H<3'	3'≤H<7'	7'≤H<10'	15'	20'	25'	30'	40'	H ≥ 40'
36"	4"	4000	0.19	0.18	0.14	0.11	0.12	0.16	0.21	0.28	0.39	**	**
			0.13	0.12	0.09	0.07	0.07	0.08	0.11	0.14	0.17	**	**
		6000	*	*	*	*	*	*	*	*	*	0.52	**
			*	*	*	*	*	*	*	*	*	0.22	**
36"	4¾"	4000	0.16	0.15	0.12	0.10	0.10	0.13	0.17	0.21	0.25	0.50	**
			0.10	0.09	0.07	0.07	0.07	0.07	0.08	0.10	0.12	0.17	**
42"	4½"	4000	0.20	0.19	0.17	0.17	0.17	0.20	0.25	0.36	0.49	**	**
			0.13	0.12	0.10	0.07	0.07	0.10	0.13	0.17	0.21	**	**
42"	5¼"	4000	0.16	0.16	0.14	0.14	0.14	0.16	0.21	0.25	0.37	**	**
			0.10	0.10	0.08	0.07	0.07	0.08	0.10	0.12	0.15	**	**
		5000	*	*	*	*	*	*	*	*	*	0.53	**
			*	*	*	*	*	*	*	*	*	0.20	**
48"	5"	4000	0.18	0.20	←	0.19	→	0.23	0.31	0.45	0.62	**	**
			0.11	0.13	←	0.12	→	0.12	0.16	0.20	0.24	**	**
48"	5¾"	4000	0.18	0.17	←	0.16	→	0.20	0.25	0.32	0.52	**	**
			0.11	0.10	←	0.10	→	0.07	0.12	0.15	0.18	**	**
		5000	*	*	*	*	*	*	*	*	*	0.71	**
			*	*	*	*	*	*	*	*	*	0.24	**
54"	5½"	4000	0.21	0.21	←	0.20	→	0.26	0.38	0.55	**	**	**
			0.14	0.13	←	0.12	→	0.14	0.18	0.23	**	**	**
		5000	*	*	*	*	*	*	*	*	0.64	**	**
			*	*	*	*	*	*	*	*	0.26	**	**
54"	6¼"	4000	0.19	0.18	←	0.18	→	0.23	0.29	0.45	0.68	**	**
			0.12	0.11	←	0.10	→	0.11	0.14	0.18	0.22	**	**

Installation Requirements

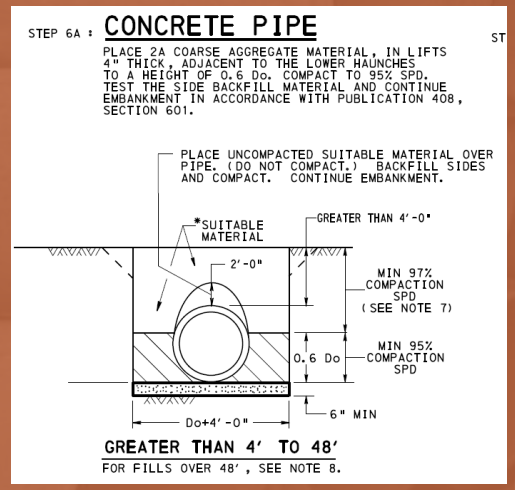

Indirect Design (Class of Pipe)

$$D = \left(\frac{12}{S_i}\right)\left(\frac{W_E + W_F}{B_{FE}} + \frac{W_L}{B_{FLL}}\right)$$

Relating Installed Load to Test Load

Design Loads
Earth
Live
Fluid
Self

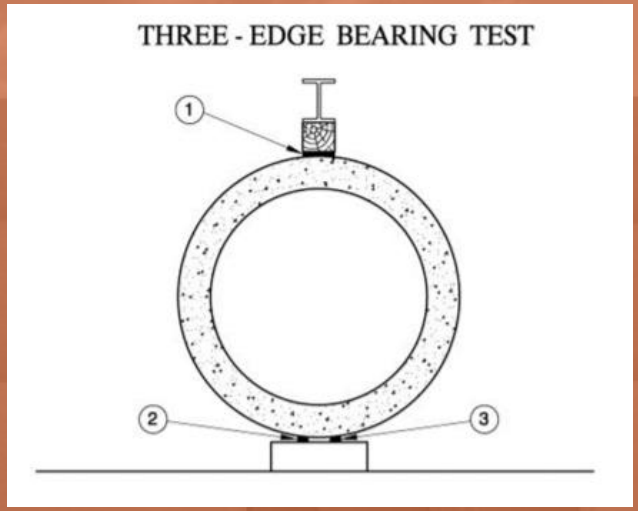

Test Condition

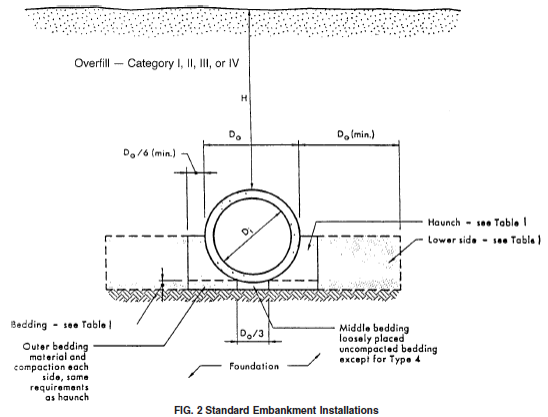

FIG. 2 Standard Embankment Installations

Installation Requirements

TABLE 2 Design Requirements for Class II Reinforced Concrete Pipe[A]

NOTE 1—See Section 5 for basis of acceptance specified by the owner. The strength test requirements in pounds-force per linear foot of pipe under the three-edge-bearing method shall be either the D-load (test load expressed in pounds-force per linear foot per foot of diameter) to produce a 0.01-in. crack, or the D-loads to produce the 0.01-in. crack and the ultimate load as specified below, multiplied by the internal diameter of the pipe in feet.

D-load to produce a 0.01-in. crack	1000
D-load to produce the ultimate load	1500

Internal Designated Diameter, in.	Reinforcement, in.²/linear ft of pipe wall											
	Wall A				Wall B				Wall C			
	Concrete Strength, 4000 psi				Concrete Strength, 4000 psi				Concrete Strength, 4000 psi			
	Wall Thickness, in.	Circular Reinforcement[C]		Elliptical Reinforcement[D]	Wall Thickness, in.	Circular Reinforcement[C]		Elliptical Reinforcement[D]	Wall Thickness, in.	Circular Reinforcement[C]		Elliptical Reinforcement[D]
		Inner Cage	Outer Cage			Inner Cage	Outer Cage			Inner Cage	Outer Cage	
12	1¾	0.07[B]	. . .	. . .	2	0.07[B]	. . .	. . .	2¾	0.07[B]	. . .	. . .
15	1⅞	0.07[B]	. . .	. . .	2¼	0.07[B]	. . .	. . .	3	0.07[B]	. . .	. . .
18	2	0.07[B]	. . .	0.07[B]	2½	0.07[B]	. . .	0.07[B]	3¼	0.07[B]	. . .	0.07[B]
21	2¼	0.12	. . .	0.10	2¾	0.07[B]	. . .	0.07[B]	3½	0.07[B]	. . .	0.07[B]
24	2½	0.12	. . .	0.11	3	0.07[B]	. . .	0.07[B]	3¾	0.07[B]	. . .	0.07[B]
27	2⅝	0.15	. . .	0.12	3¼	0.12	. . .	0.11	4	0.07[B]	. . .	0.07[B]
30	2¾	0.15	. . .	0.14	3½	0.14	. . .	0.12	4¼	0.07[B]	. . .	0.07[B]

Suggested Steel Areas for the Test condition

Benefits of the Indirect Design Method

- Its validity has been proven over time
- It is a simple method to use
- It is a proof-of-performance method

Intention for Direct Design

- Used for higher strength pipe that can not be found in ASTM/AASHTO Tables
- Used for larger diameter pipes
- Used for specific loads and load cases
- Used when stirrup reinforcement is required

Standard Installations

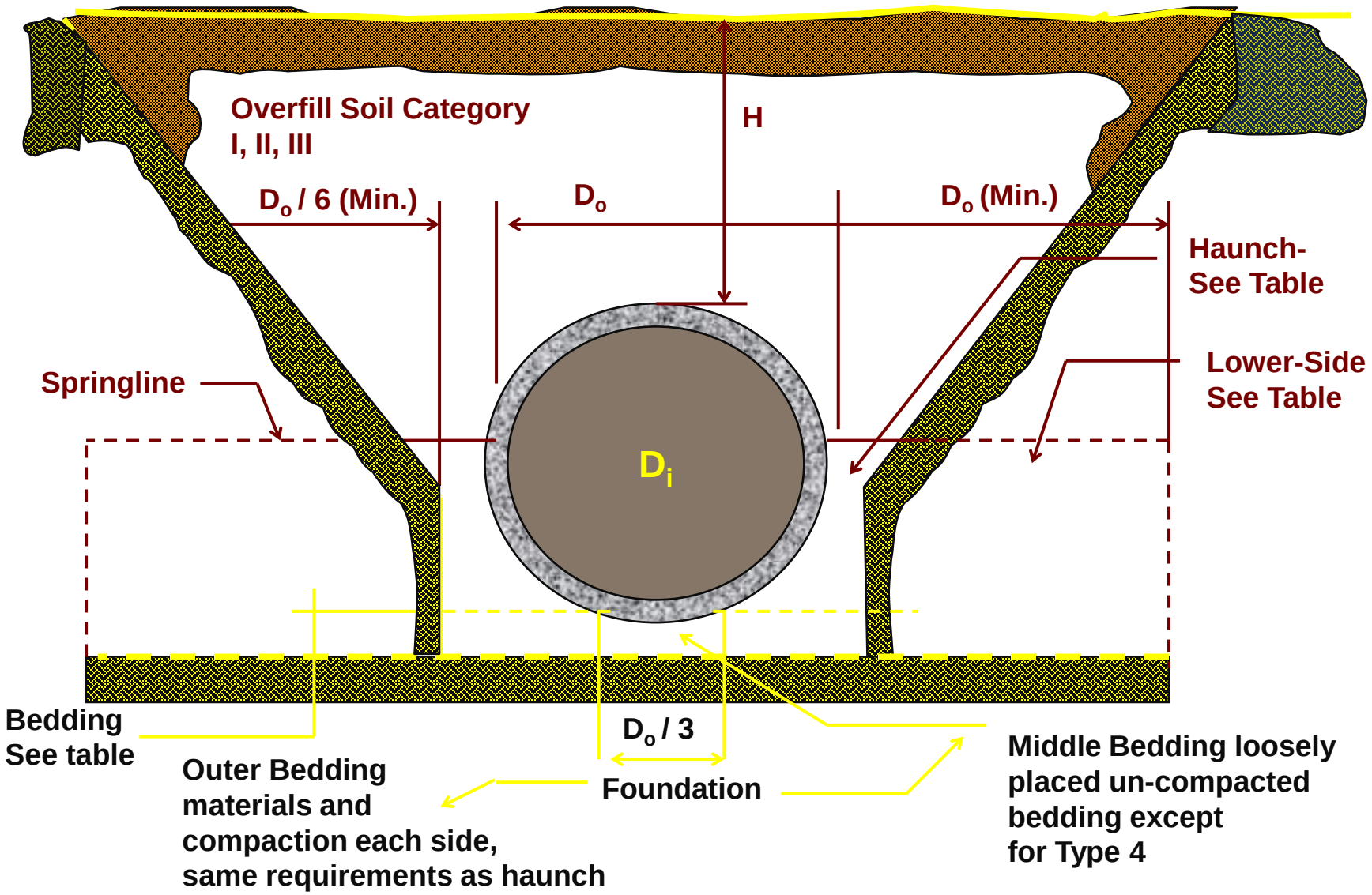

Standard Installations Soil & Min. Compaction Reqs.

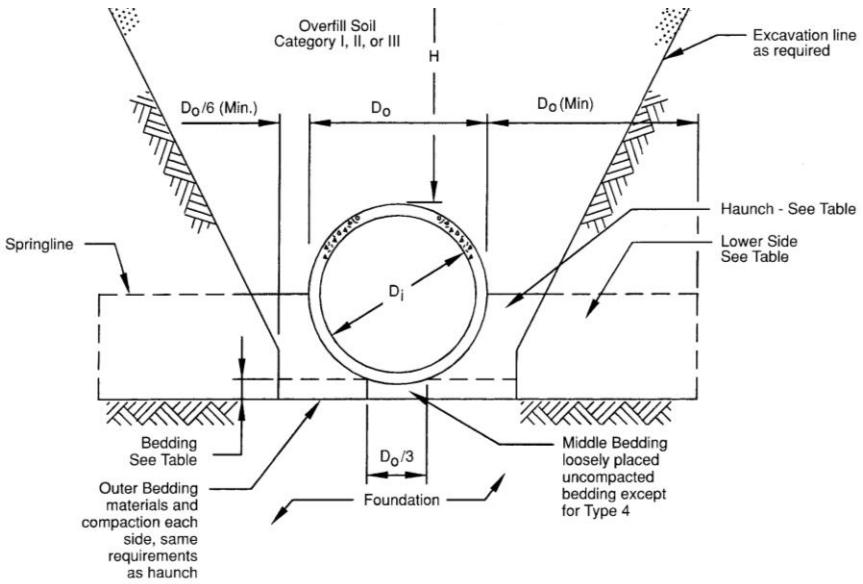

	Representative Soil Types		Percent Compaction	
SIDD Soil	**USCS,**	**Standard AASHTO**	**Standard Proctor**	**Modified Proctor**
Gravelly Sand (Category 1)	SW, SP, GW, GP	A1,A3	100 95 90 85 80 61	95 90 85 80 75 59
Sandy Silt (Category II)	GM, SM, ML, Also GC, SC with less than 20% passing #200 sieve	A2, A4	100 95 90 85 80 49	95 90 85 80 75 46
Silty Clay (Category III)	CL, MH, GC, SC	A5, A6	100 95 90 85 80 45	90 85 80 75 70 40

Installation Type	Bedding Thickness	Haunch and Outer Bedding	Lower Side
Type 1	D_O/24 minimum, not less than 75 mm (3"). If rock foundation, use D_O/12 minimum, not less than 150 mm (6").	95% Category I	90% Category I, 95% Category II, or 100% Category III
Type 2	D_O/24 minimum, not less than 75 mm (3"). If rock foundation, use D_O/12 minimum, not less than 150 mm (6").	90% Category I or 95% Category II	85% Category I, 90% Category II, or 95% Category III
Type 3	D_O/24 minimum, not less than 75 mm (3"). If rock foundation, use D_O/12 minimum, not less than 150 mm (6") .	85% Category I, 90% Category II, or 95% Category III	85% Category I, 90% Category II, or 95% Category III
Type 4	No bedding required, except if rock foundation, use D_O/12 minimum, not less than 150 mm (6").	No compaction required, except if Category III, use 85% Category III	No compaction required, except if Category III, use 85% Category III

Notes:

1. *Compaction and soil symbols - i.e. "95% Category I"- refers to Category I soil material with minimum standard Proctor compaction of 95%. See Illustration 4.8 for equivalent modified Proctor values.*
2. *The trench top elevation shall be no lower than 0.1 H below finished grade or, for roadways, its top shall be no lower than an elevation of 0.3 m (1') below the bottom of the pavement base material.*
3. *Soil in bedding and haunch zones shall be compacted to at least the same compaction as specified for the majority of soil in the backfill zone.*
4. *The trench width shall be wider than shown if required for adequate space to attain the specified compaction in the haunch and bedding zones.*
5. *For trench walls that are within 10 degrees of vertical, the compaction or firmness of the soil in the trench walls and lower side zone need not be considered.*
6. *For trench walls with greater than 10 degree slopes that consist of embankment, the lower side shall be compacted to at least the same compaction as specified for the soil in the backfill zone.*

Soil / Pipe System

Stronger Pipe + Lesser Quality Installation or Lesser Strength Pipe + High Quality Installation

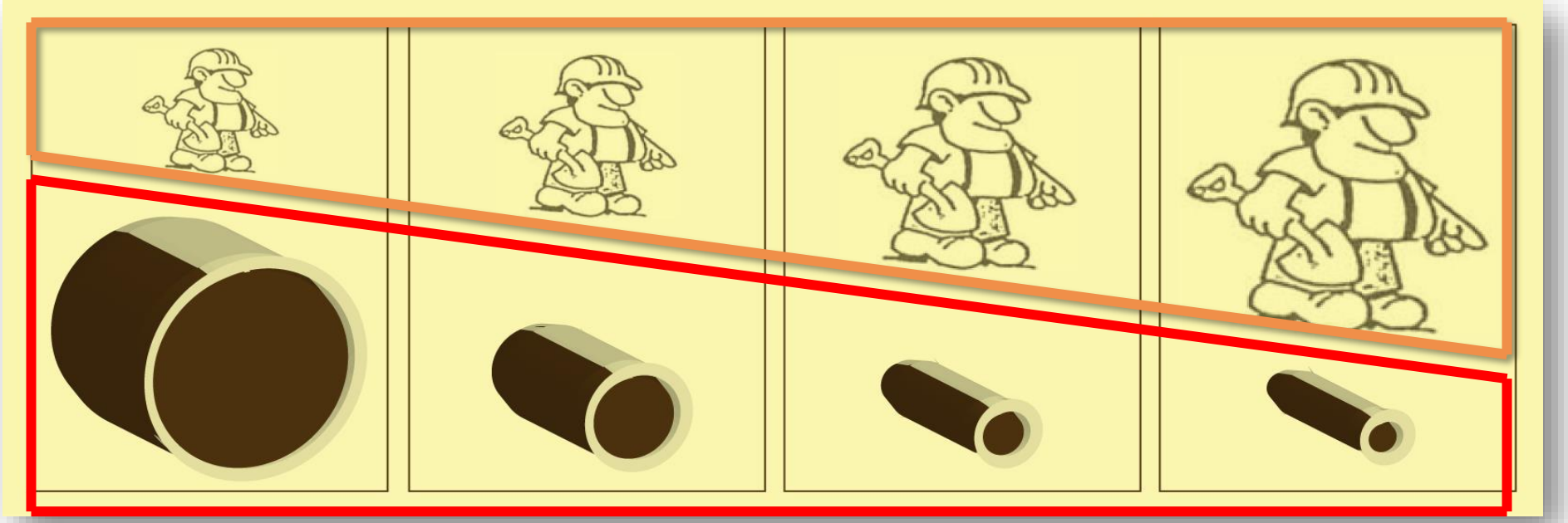

Installation Conditions

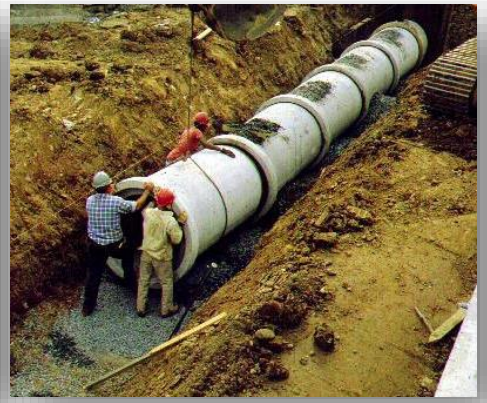

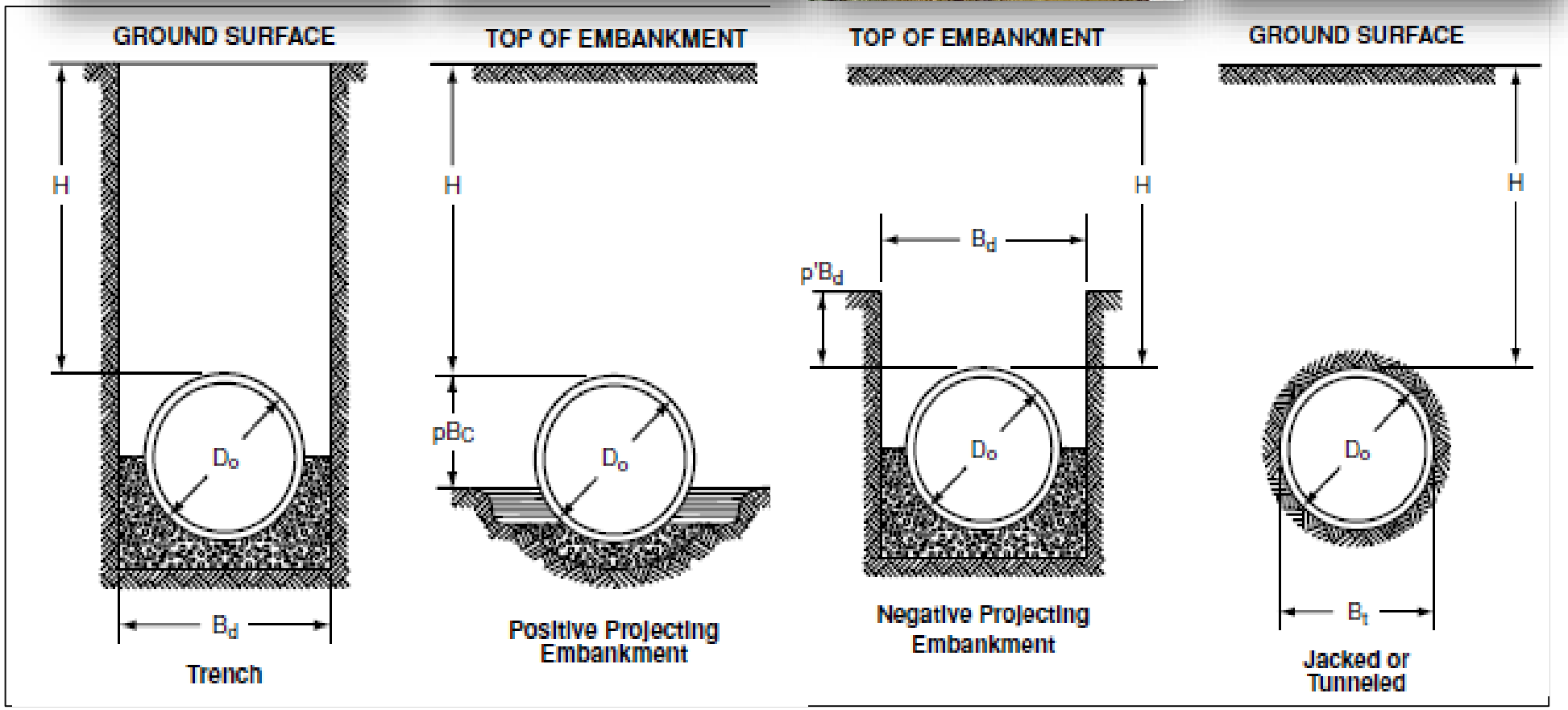

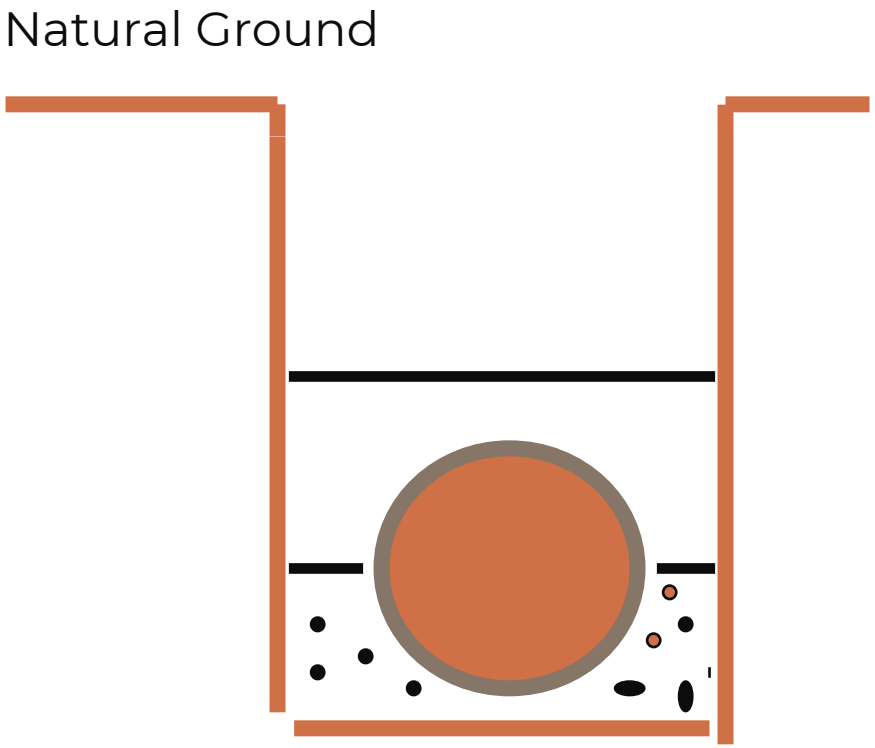

TRENCH

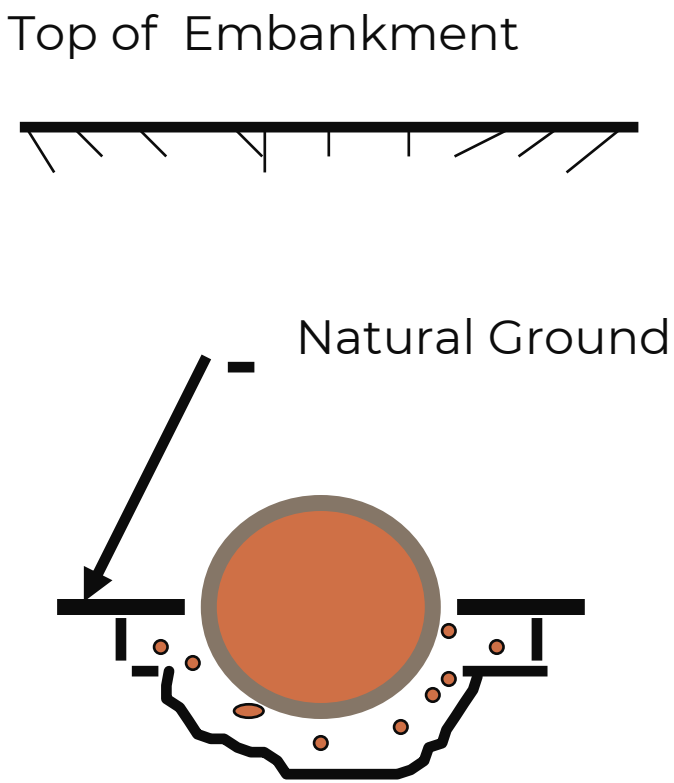

EMBANKMENT

Embankment Installation

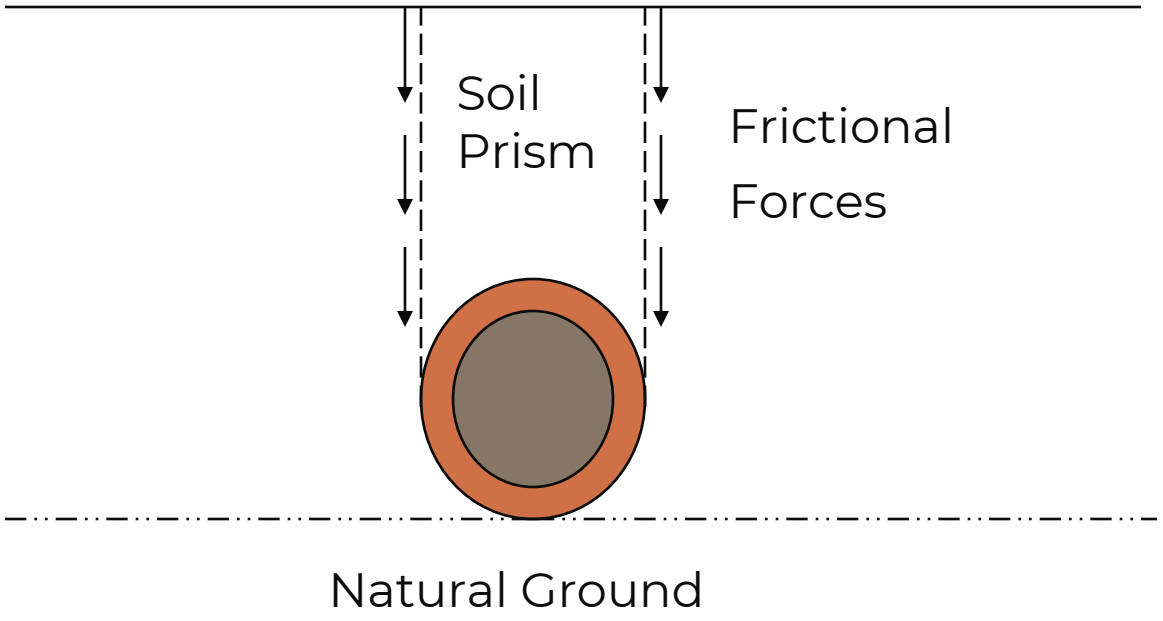

Vertical Pressures – Positive Projecting Embankment

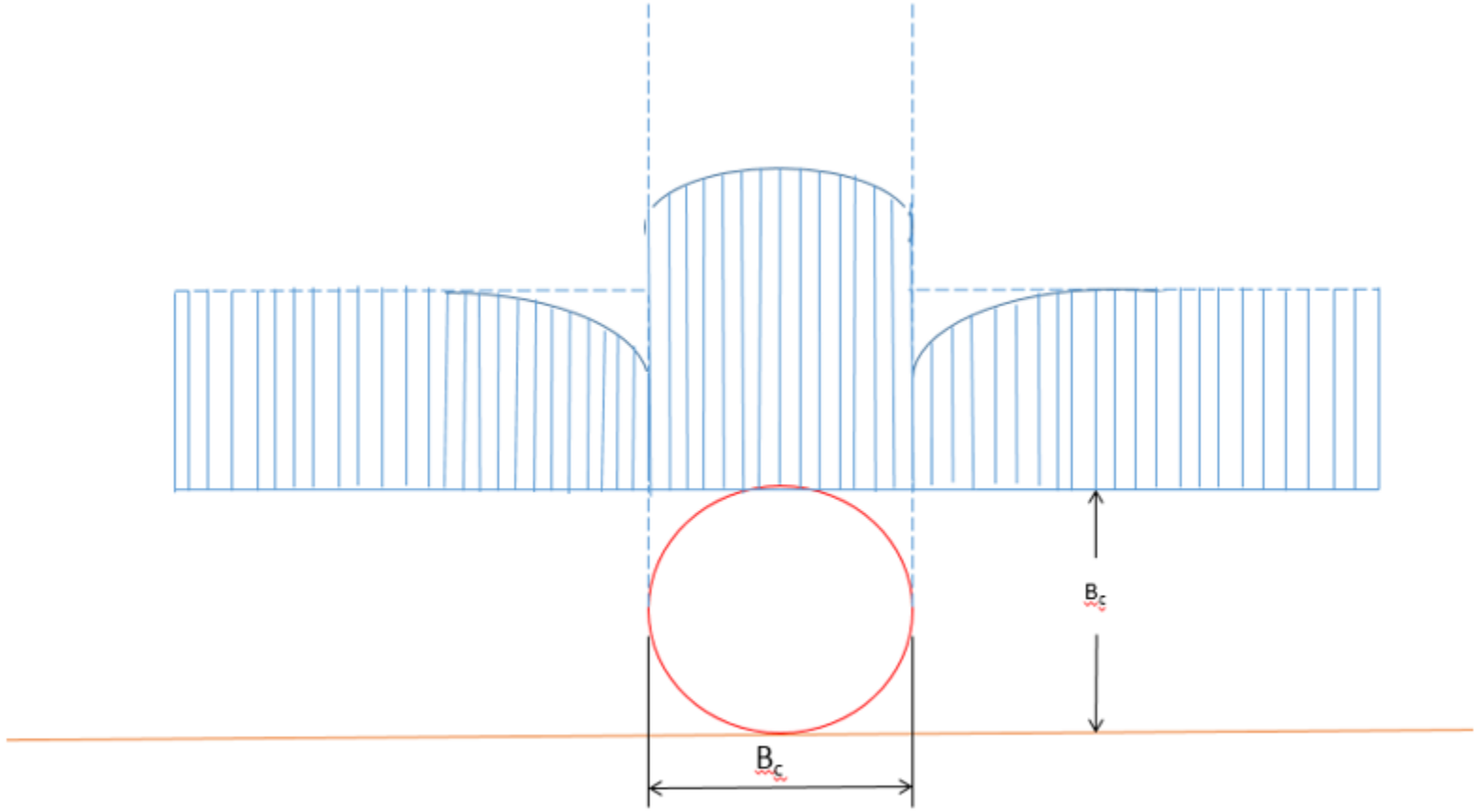

Earth Load on Rigid Pipe

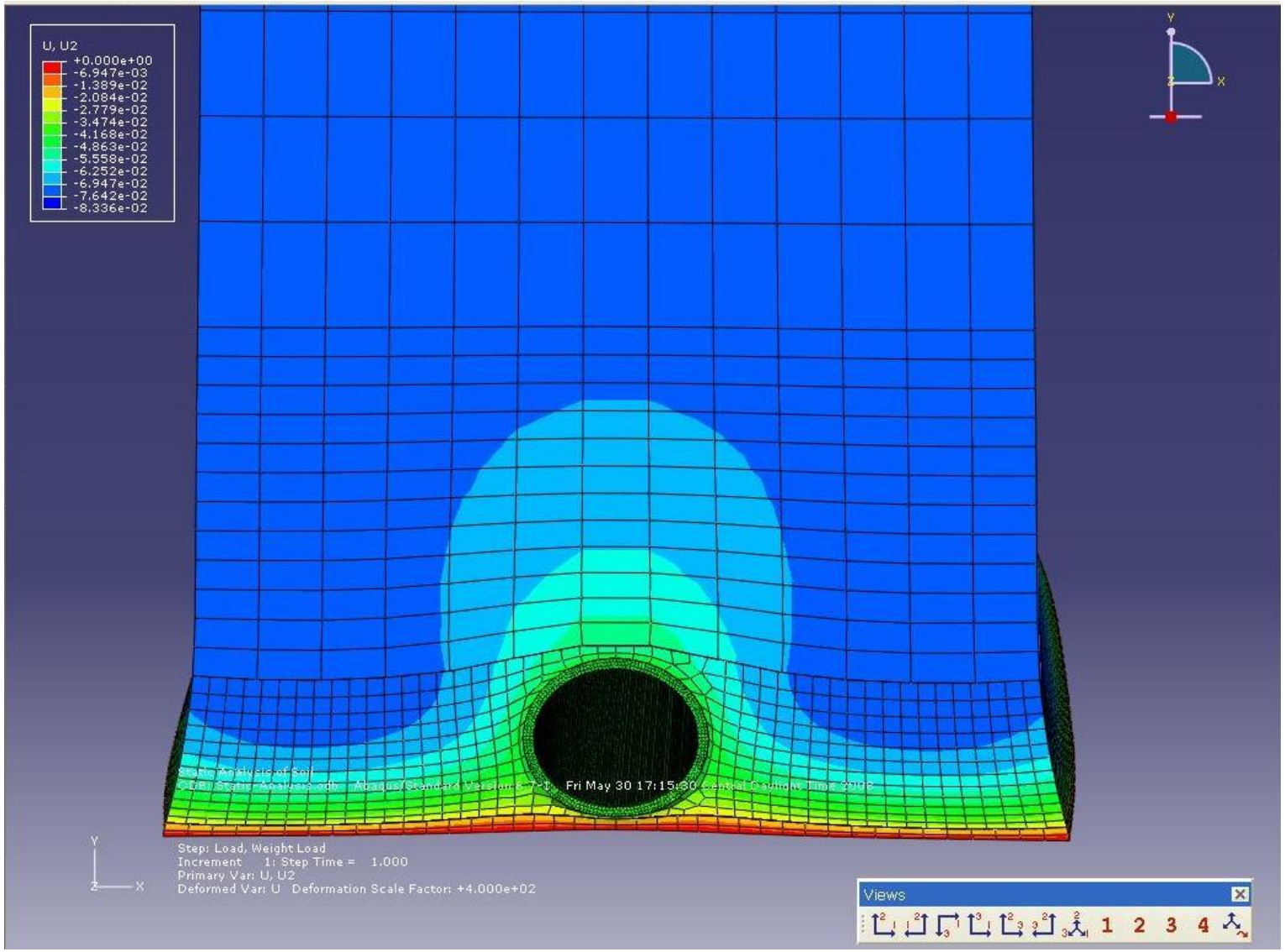
U, U2
+0.000e+00
-6.947e-03
-1.389e-02
-2.084e-02
-2.779e-02
-3.474e-02
-4.168e-02
-4.863e-02
-5.558e-02
-6.252e-02
-6.947e-02
-7.642e-02
-8.336e-02
Y
X
Step: Load, Weight Load
Increment 1: Step Time = 1.000
Primary Var: U, U2
Deformed Var: U Deformation Scale Factor: +4.000e+02
Views
1 2 3 4

Vertical Pressures

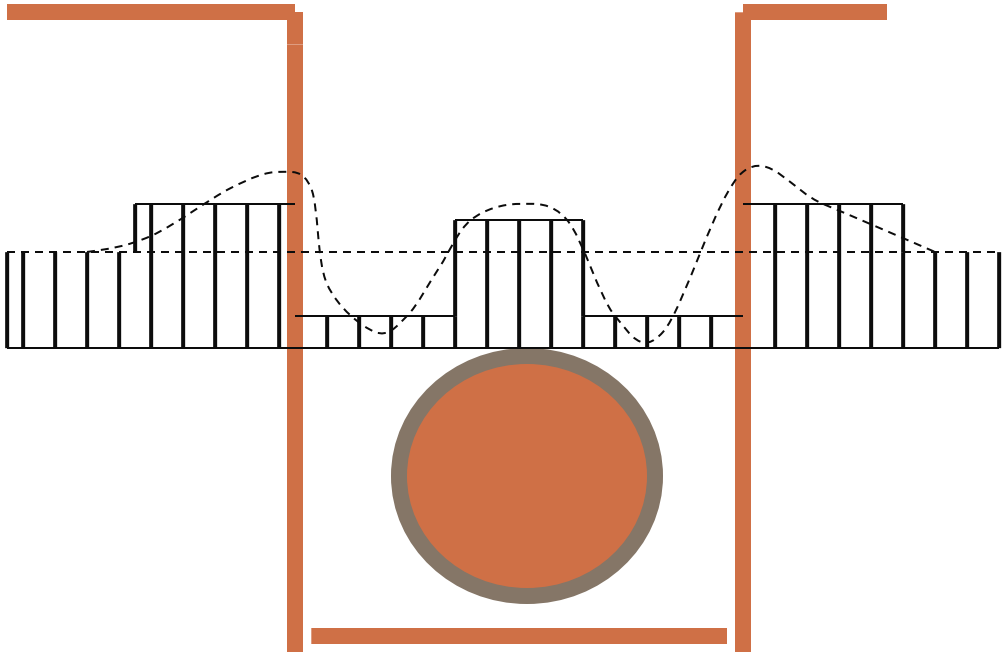

TRENCH

Earth loads on concrete pipe

Trench vs Positive-Projecting Embankment

Transition Width is the point at which the benefit becomes negligible

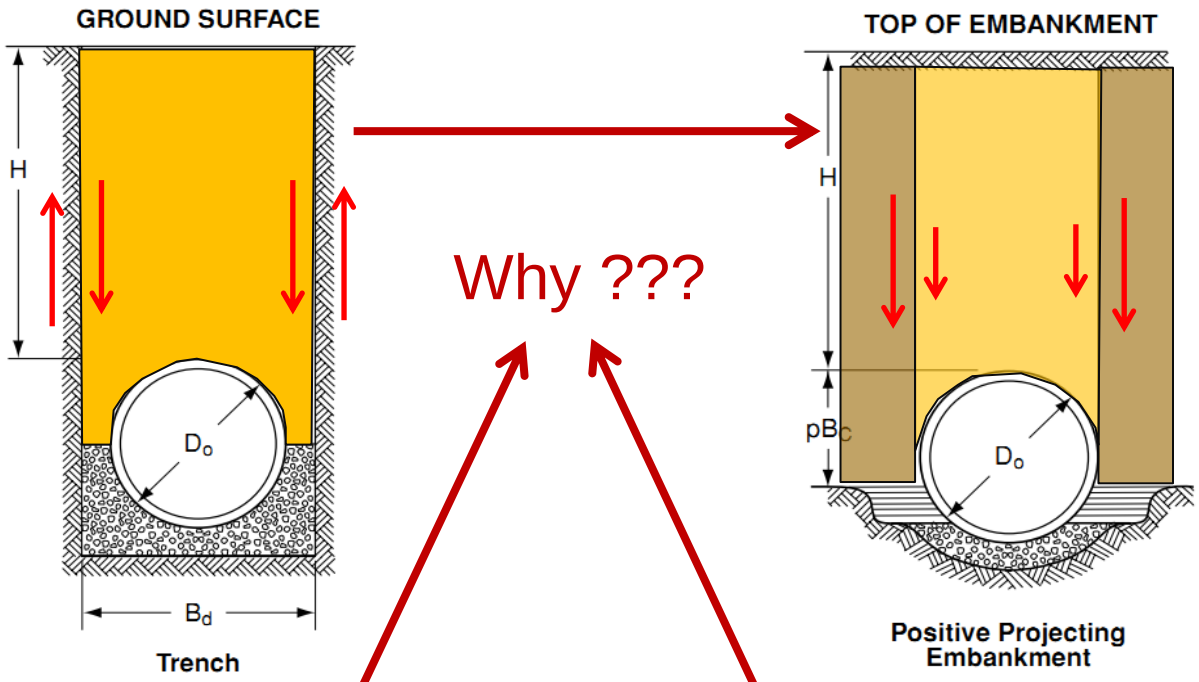

Why ???

Pipe experiences the **least** earth load

Pipe experiences the **most** earth load

Greater Than Transition Width

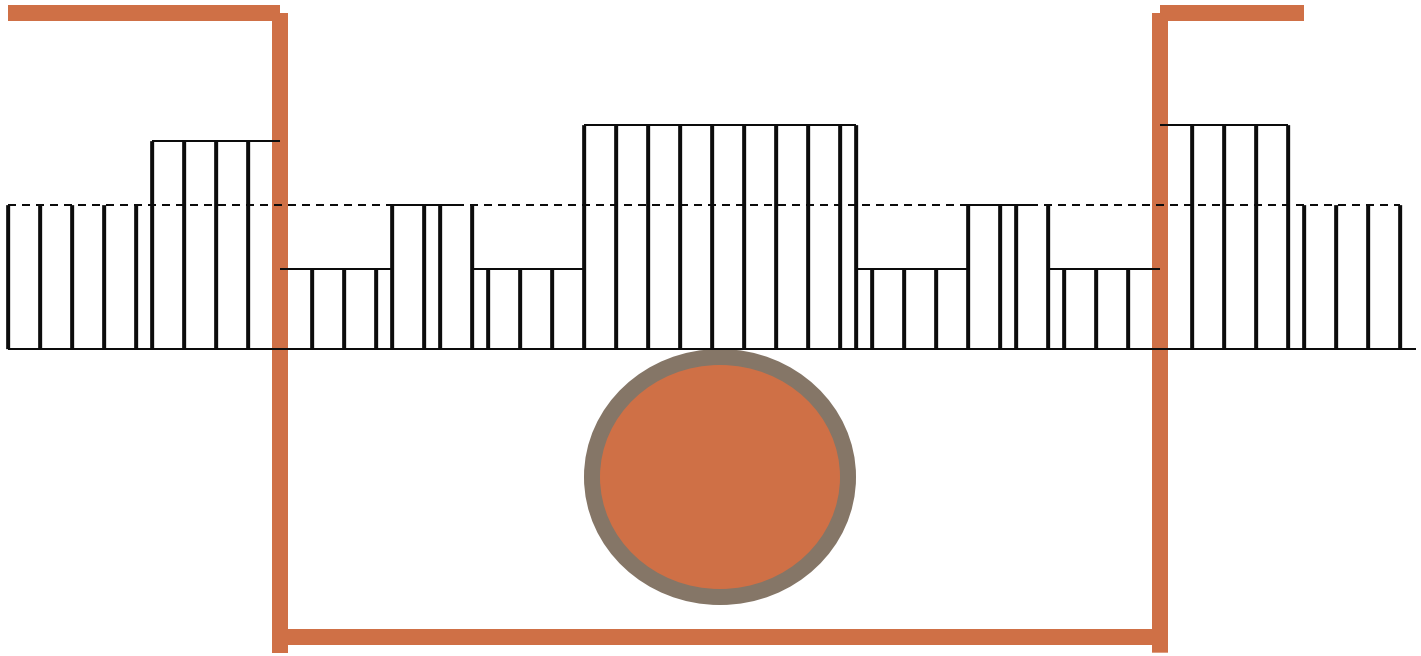

AASHTO LRFD 12.10.2.1

- "Standard installations for both embankments and trenches shall be designed for positive projection, embankment loading conditions where F_e shall be taken as the vertical arching factor, VAF, specified in Table 12.10.2.1-3 for each type of standard installation."

Soil Load

- $W_E = F_e \gamma_s B_c H$
  - γ_s = unit weight of soil (pcf)
  - B_c = outside diameter of pipe (ft)
  - H = fill height (ft)
  - F_e = soil-structure interaction factor (Vertical Arching Factor) Pipe – Section 12.10.2.1-1

Soil Load

Table 12.10.2.1-3—Coefficients for Use with Figure 12.10.2.1-1

	Installation Type			
	1	2	3	4
VAF	1.35	1.40	1.40	1.45
HAF	0.45	0.40	0.37	0.30
A1	0.62	0.85	1.05	1.45
A2	0.73	0.55	0.35	0.00
A3	1.35	1.40	1.40	1.45
A4	0.19	0.15	0.10	0.00
A5	0.08	0.08	0.10	0.11
A6	0.18	0.17	0.17	0.19
a	1.40	1.45	1.45	1.45
b	0.40	0.40	0.36	0.30
c	0.18	0.19	0.20	0.25
e	0.08	0.10	0.12	0.00
f	0.05	0.05	0.05	—
u	0.80	0.82	0.85	0.90
v	0.80	0.70	0.60	—

Weight of Fluid

Pipe Area = π x $(ID/24)^2$

W_f = Pipe Area x γ_w

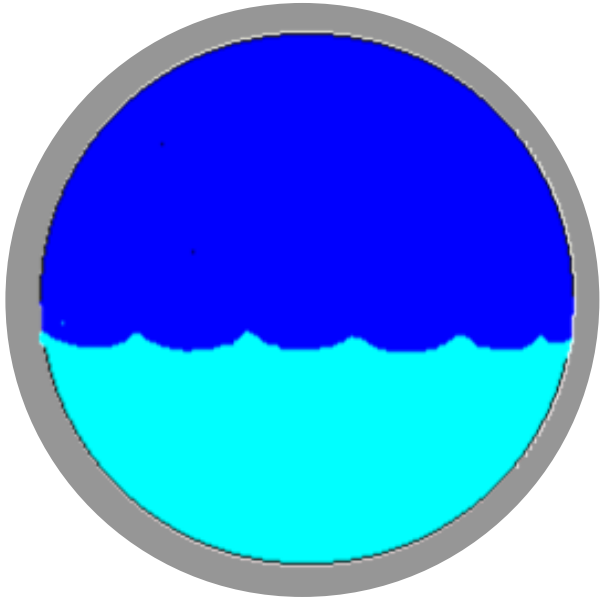

Live Load

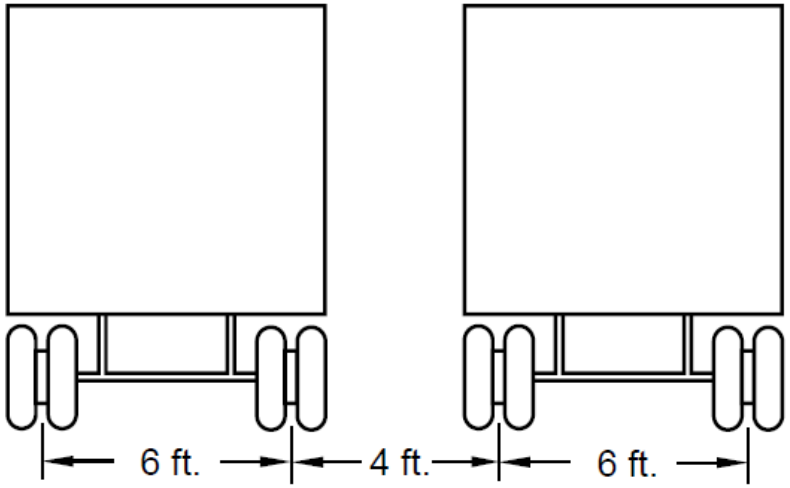
6 ft.
4 ft.
6 ft.

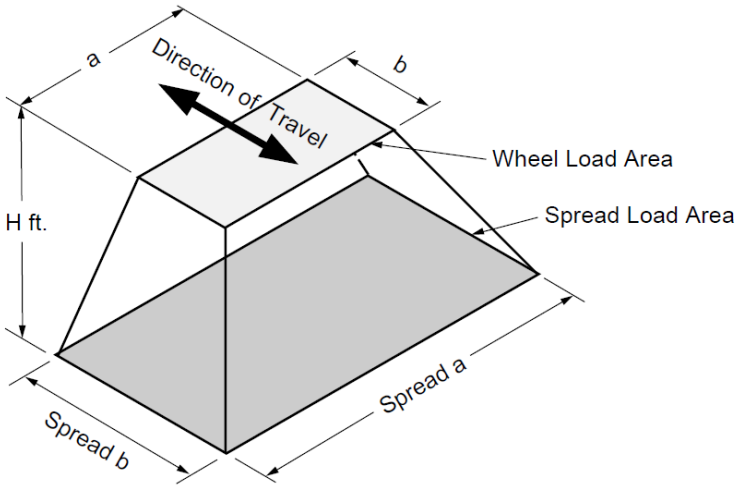
a
Direction of Travel
b
Wheel Load Area
Spread Load Area
H ft.
Spread a
Spread b

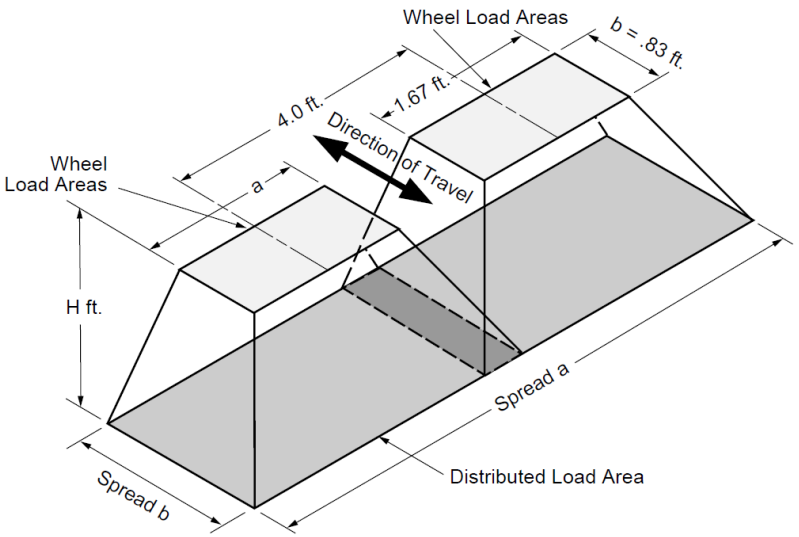
Wheel Load Areas
b = .83 ft.
1.67 ft.
4.0 ft.
Direction of Travel
Wheel
Load Areas
a
H ft.
Spread a
Distributed Load Area
Spread b

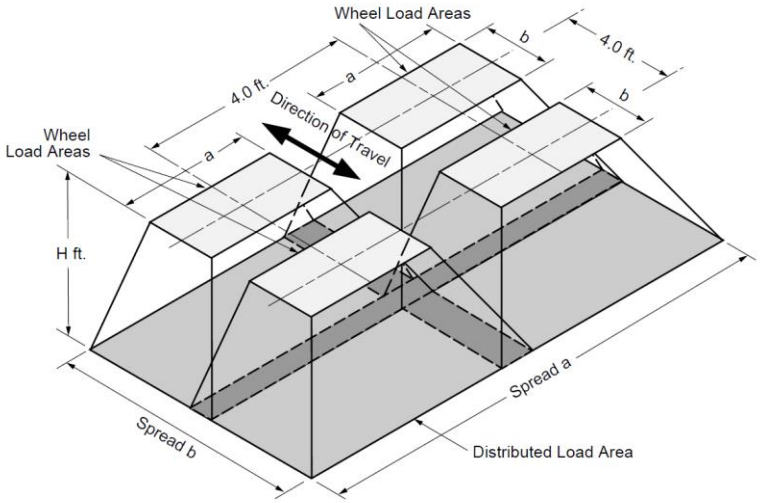
Wheel Load Areas
b
4.0 ft.
b
a
4.0 ft.
Direction of Travel
Wheel
Load Areas
a
H ft.
Spread a
Spread b
Distributed Load Area

D-Load Equation

$$D = \left(\frac{12}{S_i}\right)\left(\frac{W_E + W_F}{B_{FE}} + \frac{W_L}{B_{FLL}}\right) \qquad (12.10.4.3.1\text{-}1)$$

B_F = Bedding Factor

Bedding Factors

$$B_f = \frac{M_{TEST}}{M_{FIELD}}$$

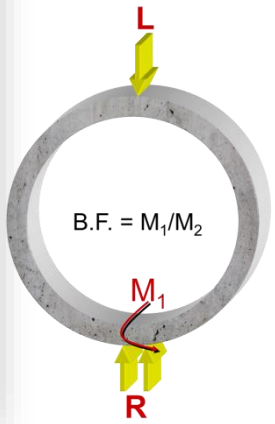

3 - Edge Bearing

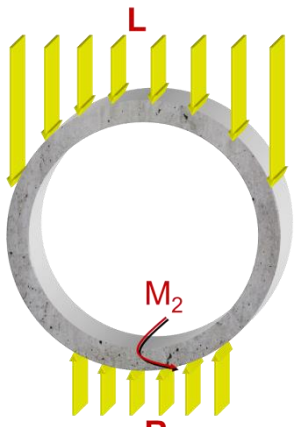

In Situ

Where:

Bf = Bedding factors

M_{FIELD} = Maximum moment in pipe under field loads before failure, (inch-pounds)

M_{TEST} = Maximum moment in pipe under three-edge bearing test before failure, (inch-pounds)

Bedding Factors

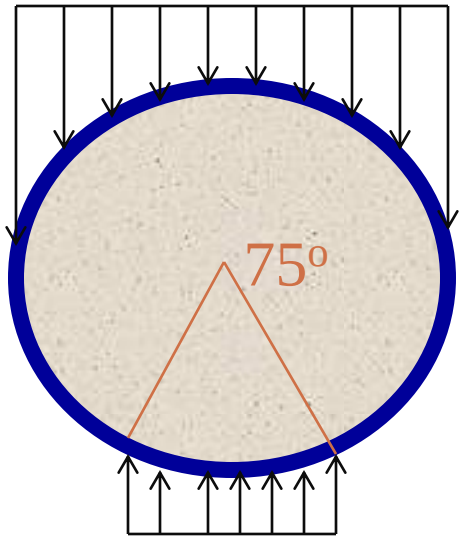

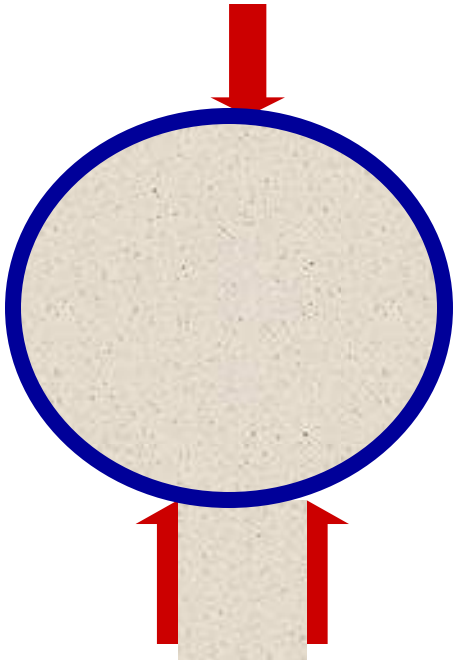

$$M = 0.170\ W_e\ r$$

$$M = 0.318\ P\ r$$

$$W_e / P = 1.9 = B_f$$

Bedding Factors

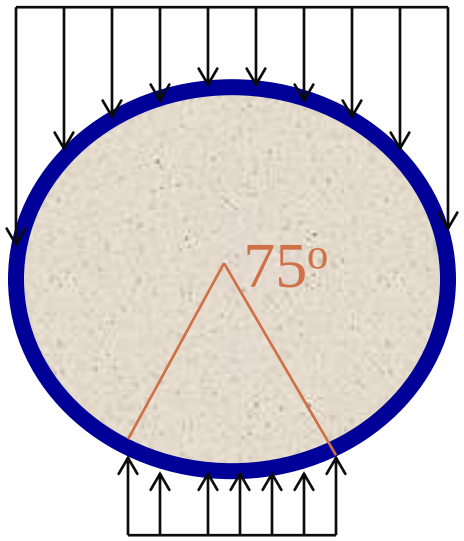

$$M = 0.170\ W_e\ r$$

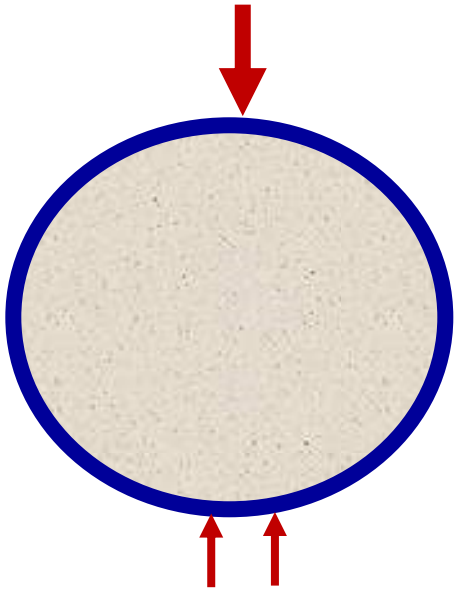

$$M = 0.318\ P\ r$$

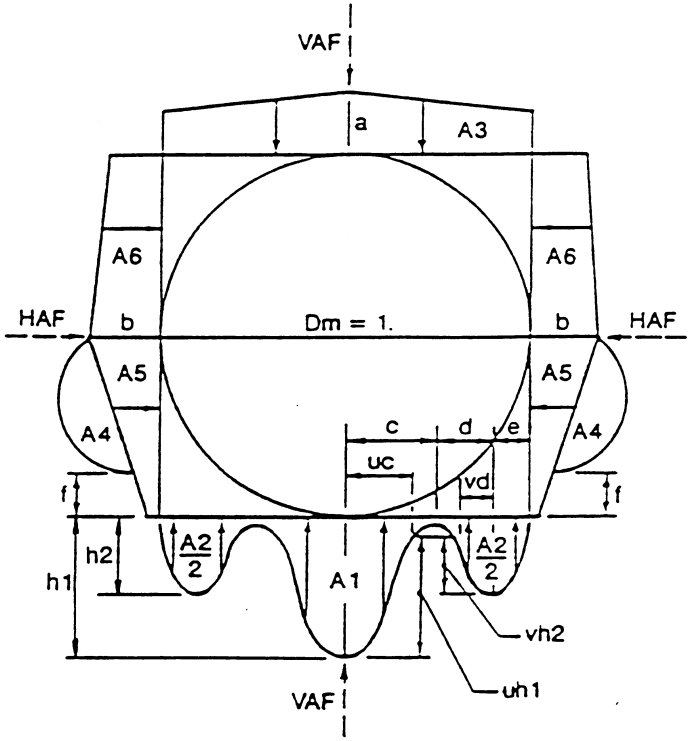

$$M = ?\ P\ r$$

Standard Installation Requirements

Table 27.5.2.2-2—Standard Trench Installation Soils and Minimum Compaction Requirements

Installation Type	Bedding Thickness	Haunch and Outer Bedding	Lower Side
Type 1	For soil foundation, D_o/24.0 in. minimum, not less than 3.0 in. For rock foundation, use D_o /12.0 in. minimum., not less than 6.0 in.	95% Category I	90% Category I, 95% Category II, or 100% Category III, or natural soils of equal firmness
Type 2—Installations are available for horizontal elliptical, vertical elliptical and arch pipe	For soil foundation, D_o/24.0 in. minimum, not less than 3.0 in. For rock foundation, use D_o/12.0 in. minimum, not less than 6.0 in.	90% Category I or 95% Category II	85% Category I, 90% Category II, 95% Category III, or natural soils of equal firmness
Type 3—Installations are available for horizontal elliptical, vertical elliptical and arch pipe	For soil foundation, D_o/24.0 in. minimum, not less than 3.0 in. For rock foundation, use D_o/12.0 in. minimum, not less than 6.0 in.	85% Category I, 90% Category II, or 95% Category III	85% Category I, 90% Category II, 95% Category III, or natural soils of equal firmness
Type 4	For soil foundation, no bedding required. For rock foundation, use D_o/12.0 in. minimum, not less than 6.0 in.	No compaction required, except if Category III, use 85% Category III	No compaction required, except if Category III, use 85% Category III or natural soil of equal firmness

Heger Distribution Drawn to Scale

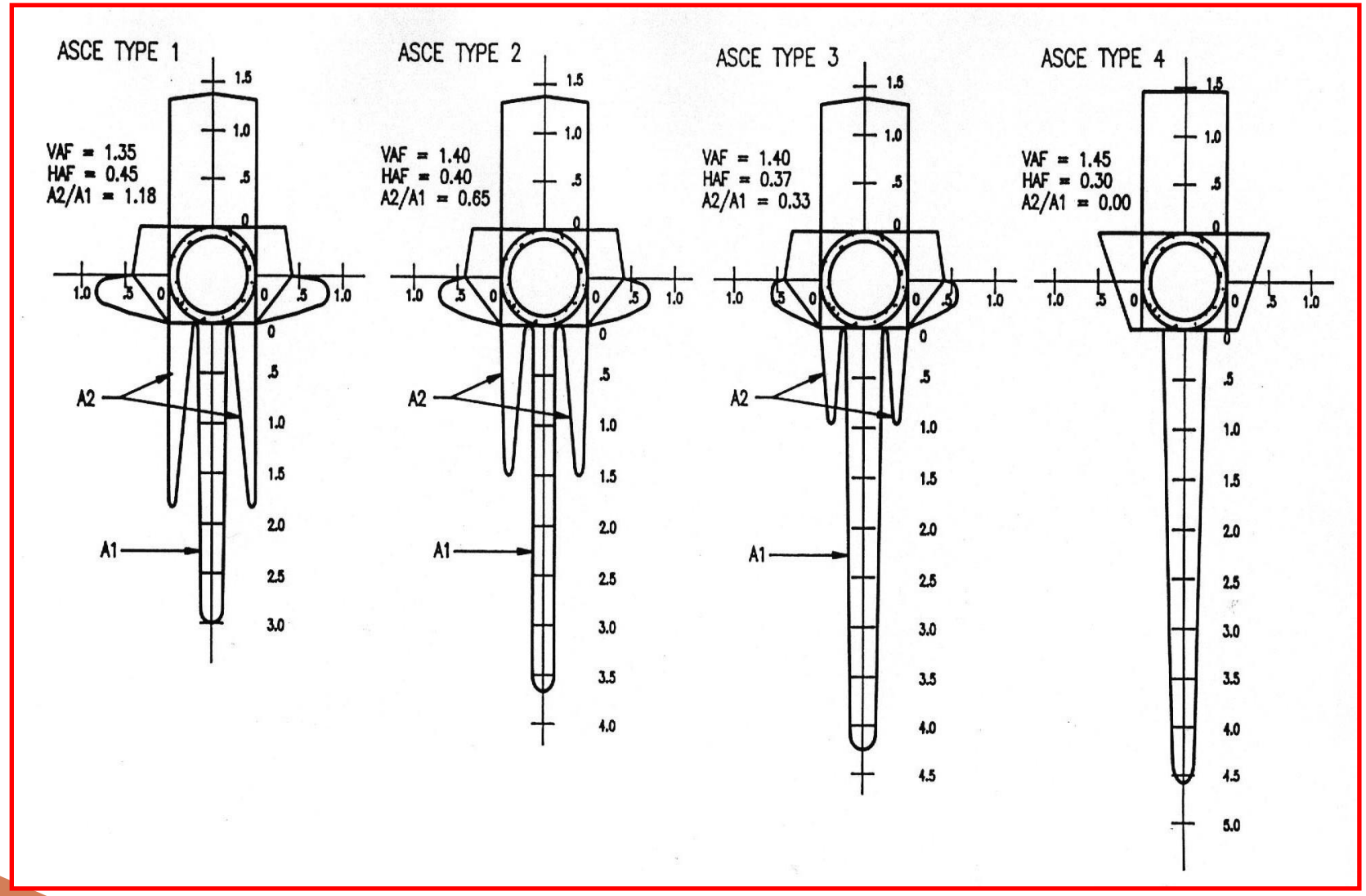

Embankment Earth Load Bedding Factor

Table 12.10.4.3.2a-1—Bedding Factors for Circular Pipe

Pipe Diameter, in.	Standard Installations			
	Type 1	Type 2	Type 3	Type 4
12	4.4	3.2	2.5	1.7
24	4.2	3.0	2.4	1.7
36	4.0	2.9	2.3	1.7
72	3.8	2.8	2.2	1.7
144	3.6	2.8	2.2	1.7

Minimum Bedding Factor

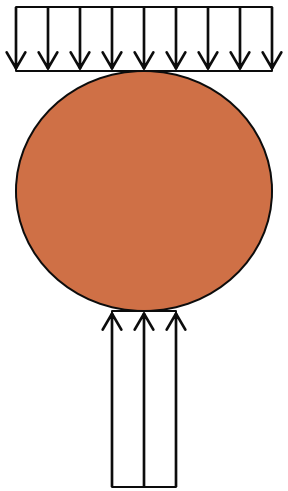

Type 4 Trench

$B_f = 1.5$

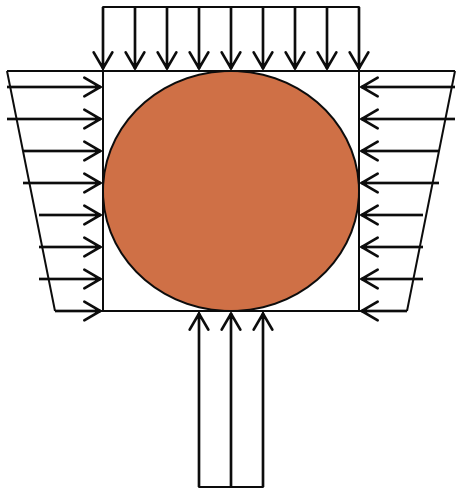

Type 4 Embankment

$B_f = 1.7$

Soil-Structure Dependence for RCP

SI Type	Min. B_f	Actual B_f	Dep. on Pipe (%)	Dep. On Soil (%)
4	1.7	1.7	(1.7/1.7)*100 = **100**	100 – 100 = **0**
3	1.7	2.3	(1.7/2.3)*100 = **74**	100 – 74 = **26**
2	1.7	2.9	(1.7/2.9)*100 = **59**	100 – 59 = **41**
1	1.7	4.0	(1.7/4.0)*100 = **43**	100 – 43 = **57**

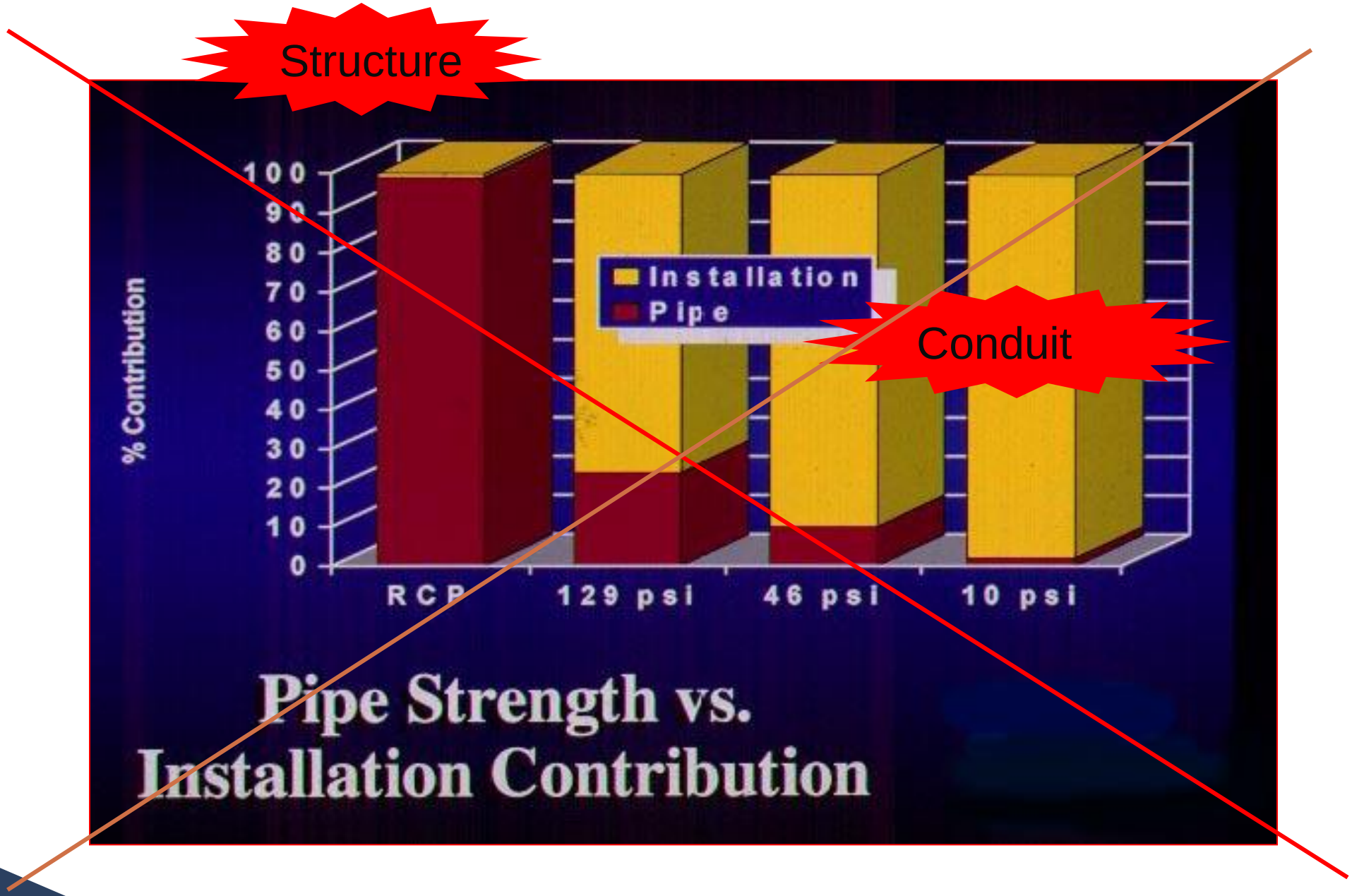
Structure
Conduit
% Contribution
100
90
80
70
60
50
40
30
20
10
0
Installation
Pipe
RCP
129 psi
46 psi
10 psi
Pipe Strength vs.
Installation Contribution

D-Load Equation

$$D = \left(\frac{12}{S_i}\right)\left(\frac{W_E + W_F}{B_{FE}} + \frac{W_L}{B_{FLL}}\right) \qquad (12.10.4.3.1\text{-}1)$$

where:

B_{FE} = earth load bedding factor specified in Article 12.10.4.3.2a or Article 12.10.4.3.2b

B_{FLL} = live load bedding factor specified in Article 12.10.4.3.2c

S_i = internal diameter of pipe (in.)

W_E = total unfactored earth load specified in Article 12.10.2.1 (kip/ft)

W_F = total unfactored fluid load in the pipe as specified in Article 12.10.2.2 (kip/ft)

W_L = total unfactored live load on unit length pipe specified in Article 12.10.2.3 (kip/ft)

0.01” Crack

$D_{0.01}$ = load (lbs/ft/ft) to produce 0.01” crack, 12” long, 1/16” deep

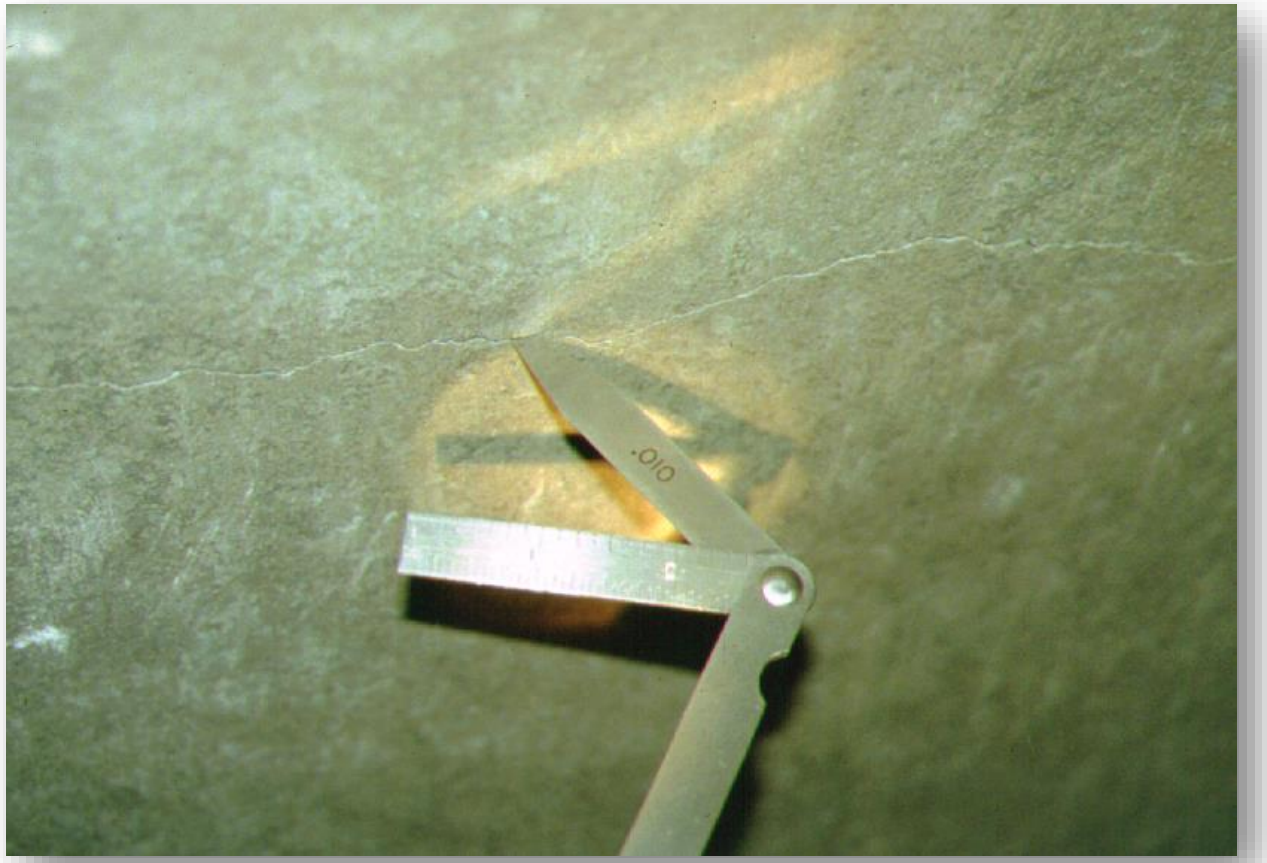

0.010” Feeler Gauge to check crack size

Concrete Pipe Design Considerations

- Three-edge Bearing Test
  - Flexure
  - Crack Control
  - Shear
  - Radial Tension

STEEL REINFORCEMENT REQUIREMENTS

versus

HEIGHT OF COVER

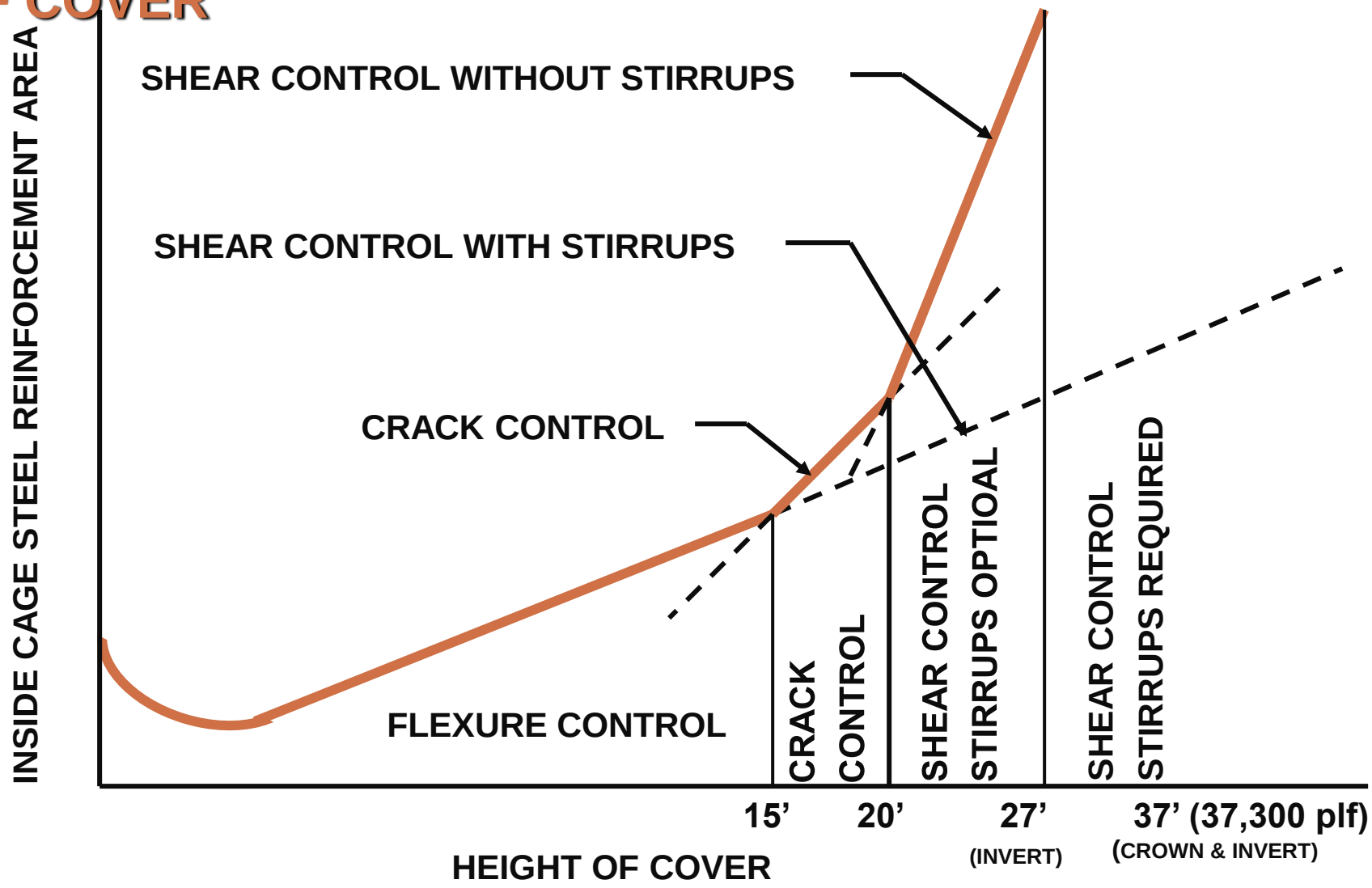

60” DIAMETER, 6” B WALL, f_c’ = 5000psi, f_s = 65,000psi, TYPE 2 INSTALLATION

Determine the D-Load

$$D = \left(\frac{12}{S_i}\right)\left(\frac{W_E + W_F}{B_{FE}} + \frac{W_L}{B_{FLL}}\right) \qquad (12.10.4.3.1\text{-}1)$$

$$D = \left(\frac{12}{48}\right)\left(\frac{2500 \text{ lbs/ft} + 784 \text{ lbs/ft}}{2.87} + \frac{3904 \text{ lbs/ft}}{2.2}\right)$$

$D_{0.01}$ = 730 lbs/ft/ft

Reinforced Pipe Classes for 0.01 Inch Crack Per ASTM C 76 (lbs/ft/ft)	
Class I	≤ 800
Class II	≤ 1000
Class III	≤ 1350
Class IV	≤ 2000
Class V	≤ 3000
Special Design	> 3000

Indirect Design Process

1. Determine pipe installation method
2. Select bedding / standard installation
3. Calculate earth load
4. Calculate live load
5. Determine bedding factors
6. Factor of safety (Service Load)
7. Select pipe strength

Arch and Elliptical Pipe

Standard Installations for Arch and Elliptical Pipe

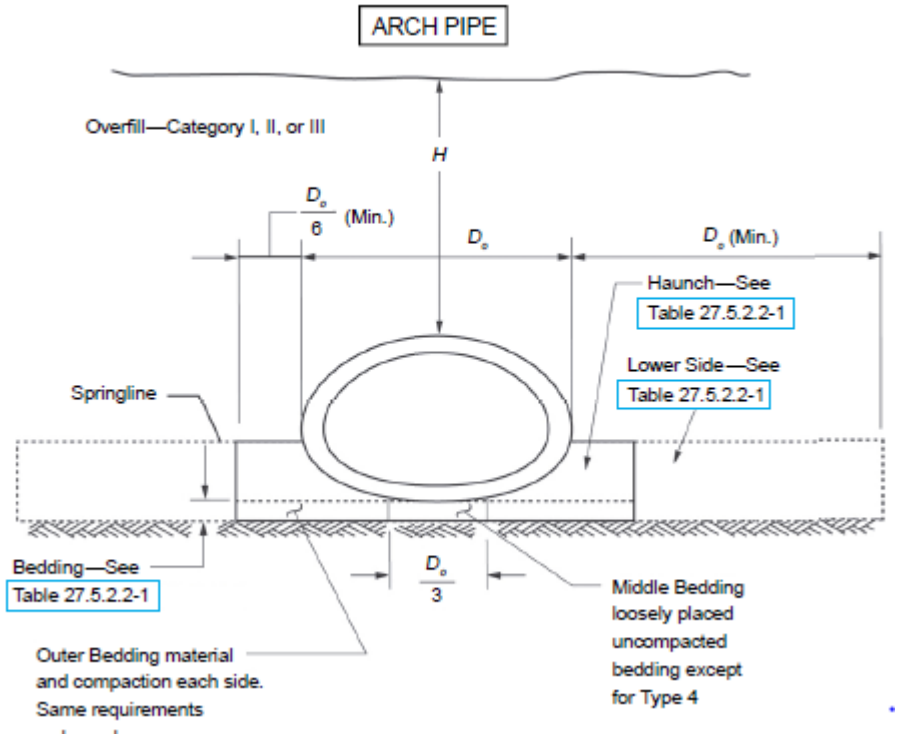

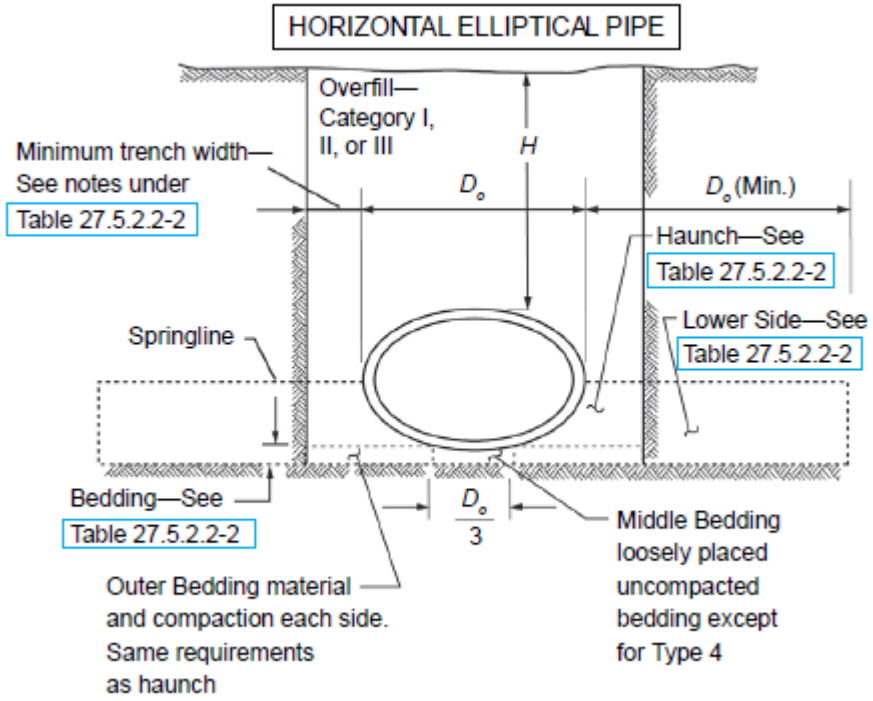

Standard Installations for Arch and Elliptical Pipe

Table 27.5.2.2-1—Standard Embankment Installation Soils and Minimum Compaction Requirements

Installation Type	Bedding Thickness	Haunch and Outer Bedding	Lower Side
Type 1	For soil foundation, D_o/24.0 in. minimum, not less than 3.0 in. For rock foundation, use D_o/12.0 in. minimum, not less than 6.0 in.	95% Category I	90% Category I, 95% Category II, or 100% Category III
Type 2—Installations are available for horizontal elliptical, vertical elliptical and arch pipe	For soil foundation, D_o/24.0 in. minimum, not less than 3.0 in. For rock foundation, use D_o/12.0 in. minimum, not less than 6.0 in.	90% Category I or 95% Category II	85% Category I, 90% Category II, or 95% Category III
Type 3—Installations are available for horizontal elliptical, vertical elliptical and arch pipe	For soil foundation, D_o/24.0 in. minimum., not less than 3.0 in. For rock foundation, use D_o/12.0 in. minimum, not less than 6.0 in.	85% Category I, 90% Category II, or 95% Category III	85% Category I, 90% Category II, or 95% Category III
Type 4	For soil foundation, no bedding required. For rock foundation, use D_o/12.0 in. minimum, not less than 6.0 in.	No compaction required, except if Category III, use 85% Category III	No compaction required, except if Category III, use 85% Category III

Bedding Factors

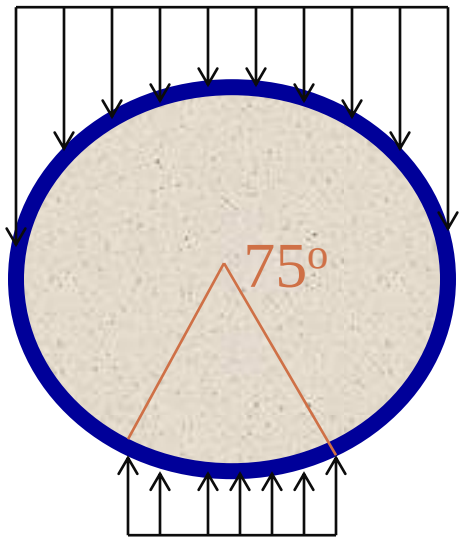

$$M = 0.170\ W_e\ r$$

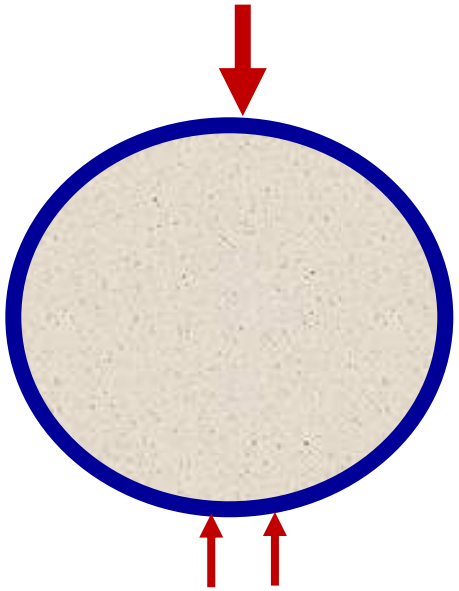

$$M = 0.318\ P\ r$$

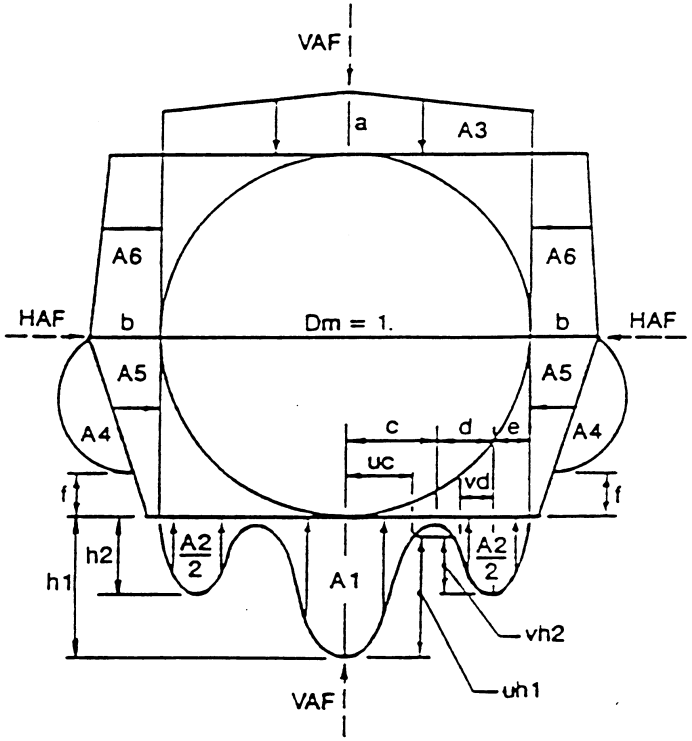

$$M = ?\ P\ r$$

Arch and Elliptical Pipe

New Drawings

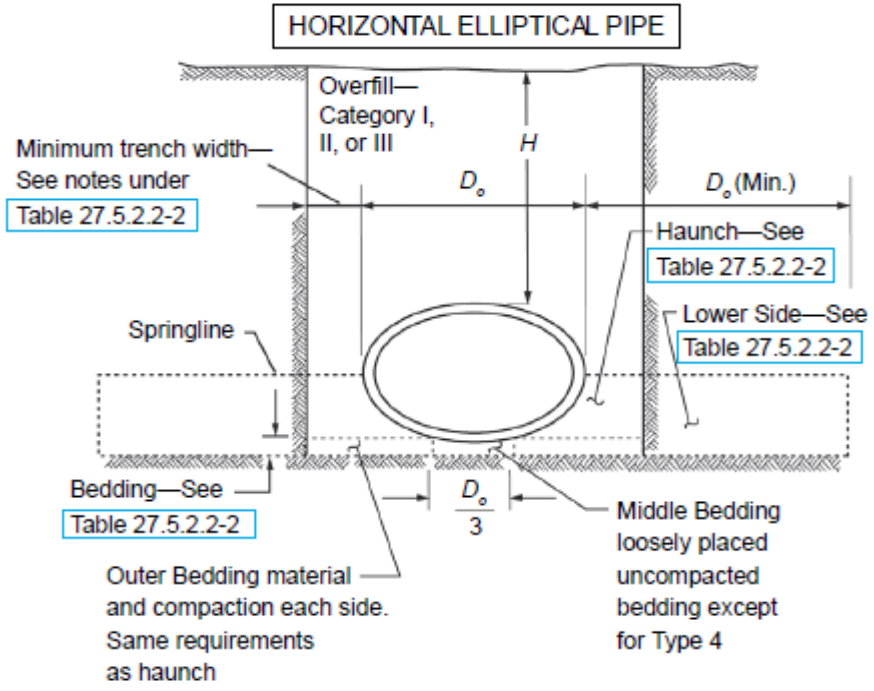

Same Old Design

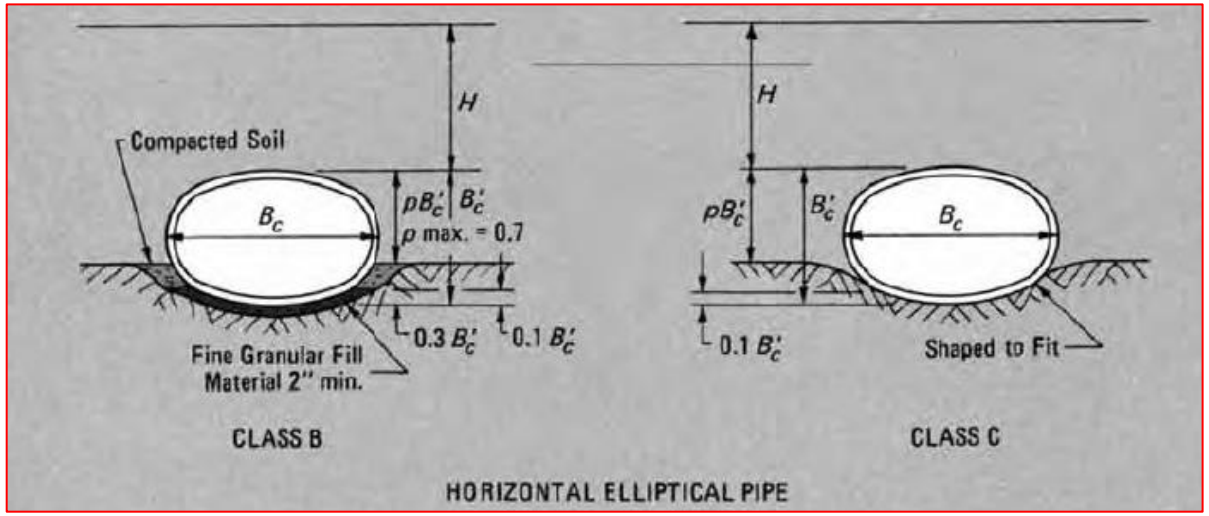

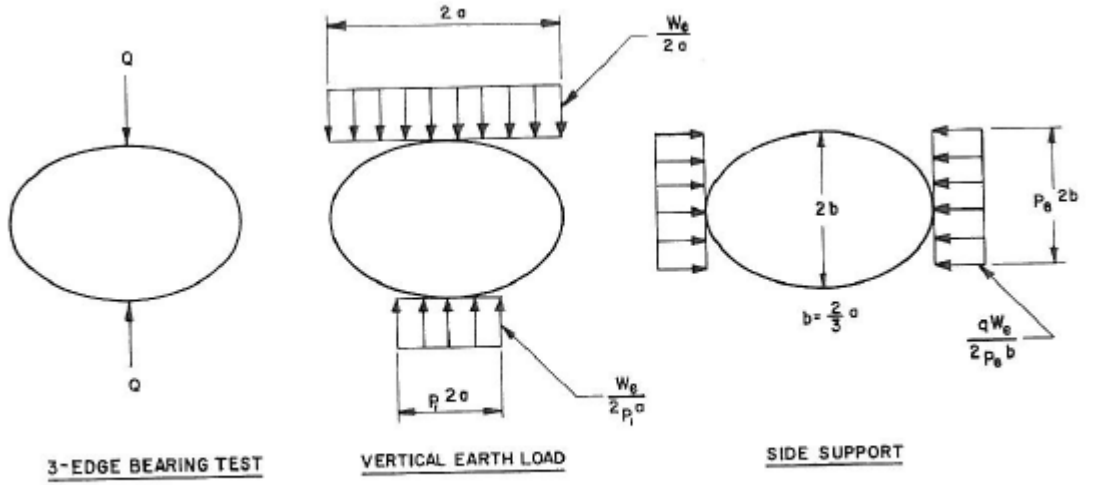

Figure 4. Load conditions for HE pipe.

D-Load Equation

$$D = \left(\frac{12}{S_i}\right)\left(\frac{W_E + W_F}{B_{FE}} + \frac{W_L}{B_{FLL}}\right) \qquad (12.10.4.3.1\text{-}1)$$

where:

B_{FE} = earth load bedding factor specified in Article 12.10.4.3.2a or Article 12.10.4.3.2b

B_{FLL} = live load bedding factor specified in Article 12.10.4.3.2c

S_i = internal diameter of pipe (in.)

W_E = total unfactored earth load specified in Article 12.10.2.1 (kip/ft)

W_F = total unfactored fluid load in the pipe as specified in Article 12.10.2.2 (kip/ft)

W_L = total unfactored live load on unit length pipe specified in Article 12.10.2.3 (kip/ft)

Embankment Earth Load Bedding Factor

Table 12.10.4.3.2a-1—Bedding Factors for Circular Pipe

Pipe Diameter, in.	Standard Installations			
	Type 1	Type 2	Type 3	Type 4
12	4.4	3.2	2.5	1.7
24	4.2	3.0	2.4	1.7
36	4.0	2.9	2.3	1.7
72	3.8	2.8	2.2	1.7
144	3.6	2.8	2.2	1.7

12.10.4.3.2b—Earth Load Bedding Factor for Arch and Elliptical Pipe

Bedding Factor Equation for Arch and Elliptical Pipe

12.10.4.3.2b—Earth Load Bedding Factor for Arch and Elliptical Pipe

The bedding factor for installation of arch and elliptical pipe shall be taken as:

$$B_{FE} = \frac{C_A}{C_N - xq} \qquad (12.10.4.3.2b\text{-}1)$$

where:

C_A = constant corresponding to the shape of the pipe, as specified in Table 12.10.4.3.2b-1

C_N = parameter that is a function of the distribution of the vertical load and vertical reaction, as specified in Table 12.10.4.3.2b-1

x = parameter that is a function of the area of the vertical projection of the pipe over which lateral pressure is effective, as specified in Table 12.10.4.3.2b-1

q = ratio of the total lateral pressure to the total vertical fill load specified herein

Bedding Factor Parameters for Arch and Elliptical Pipe

Table 12.10.4.3.2b-1—Design Values of Parameters in Bedding Factor Equation

Pipe Shape	C_A	Installation Type	C_N	Projection Ratio, p	x
Horizontal Elliptical and Arch	1.337	2	0.630	0.9	0.421
				0.7	0.369
		3	0.763	0.5	0.268
				0.3	0.148
Vertical Elliptical	1.021	2	0.516	0.9	0.718
				0.7	0.639
		3	0.615	0.5	0.457
				0.3	0.238

The value of the parameter q is taken as:

- For arch and horizontal elliptical pipe:

$$q = 0.23\frac{p}{F_e}\left(1 + 0.35p\frac{B_c}{H}\right) \qquad (12.10.4.3.2b\text{-}2)$$

- For vertical elliptical pipe:

$$q = 0.48\frac{p}{F_e}\left(1 + 0.73p\frac{B_c}{H}\right) \qquad (12.10.4.3.2b\text{-}3)$$

Comparison of Circular vs. Elliptical

$$B_{FE} = \frac{C_A}{C_N - xq}$$

RCP Elliptical – 38 x 60				
Installation Type	Min. Bedding	Embankment Bedding		VAF
	C_A/C_N	H = 5 ft.	H = 10 ft.	
2	2.12	2.46	2.40	1.4
3	1.75	1.82	1.81	1.4
p = 0.9 for Type 2, and *p* = 0.5 for Type 3				

RCP Circular – 60				
Installation Type	Min. Bedding	Embankment Bedding		VAF
		H = 5 ft.	H = 10 ft.	
2	1.9	2.83	2.83	1.4
3	1.7	2.23	2.23	1.4

The End

jbeakley@concretepipe.org

Example
Circular RCP

Indirect Design Process

1. Determine pipe installation method
2. Select bedding / standard installation
3. Calculate earth load
4. Calculate live load
5. Determine bedding factors
6. Factor of safety (Service Load)
7. Select pipe strength

Example Problem

- Pipe = 48” Circular Pipe
- Fill Height = 15 ft.
- Bedding = 90% Compaction of Granular Material up to Springline
- Live Load = AASHTO HL-93
- Direction of Traffic = Parallel to Span

Pipe Information

Circular Pipe

- ID = 48 inches
- t = 48/12 + 1.75 = 5.75 inches
  - A C-wall pipe is conservatively assumed
- B_c = 48 + 2(5.75) = 4.96 feet

Installation Information

- Standard Installation = Type 2
  - 90% compaction of a granular material
- Soil Unit Weight - γ_s = 120 pcf
- Vertical Arching Factor – VAF = 1.40

AASHTO LRFD 12.10.2.1

Table 12.10.2.1-3 Coefficients for use with Figure 1.

	Installation Type			
	1	2	3	4
VAF	1.35	1.40	1.40	1.45
HAF	0.45	0.40	0.37	0.30
A1	0.62	0.85	1.05	1.45
A2	0.73	0.55	0.35	0.00
A3	1.35	1.40	1.40	1.45
A4	0.19	0.15	0.10	0.00
A5	0.08	0.08	0.10	0.11
A6	0.18	0.17	0.17	0.19
a	1.40	1.45	1.45	1.45
b	0.40	0.40	0.36	0.30
c	0.18	0.19	0.20	0.25
e	0.08	0.10	0.12	0.00
f	0.05	0.05	0.05	—
u	0.80	0.82	0.85	0.90
v	0.80	0.70	0.60	—

Earth Load on Pipe

$$PL = \gamma_s \times B_c \times H$$

$$W_e = VAF \times PL$$

Circular

PL = 120 pcf x 4.96 ft x 15 ft
PL = 8928 lbs/ft

W_e = 1.40 x 8928 lbs/ft
W_e = 12,500 lbs/ft

Fluid Load

$$\text{Pipe Area} = \pi \times (ID/24)^2$$

$$\text{Pipe Area} = \pi \times (48/24)^2$$

$$\text{Pipe Area} = 12.57\ ft^2$$

$$W_f = \text{Pipe Area} \times \gamma_w$$

$$W_f = 12.57\ ft^2 \times 62.4\ pcf$$

$$W_f = 784\ lbs/ft$$

Live Load

- H = 15 ft
- H > 8 ft
- H > ID = 4 ft
- Live load need not be considered.

Determine the Earth Load Bedding Factor

Table 12.10.4.3.2a-1 Bedding Factors for Circular Pipe.

Pipe Diameter, in.	Standard Installations			
	Type 1	Type 2	Type 3	Type 4
12	4.4	3.2	2.5	1.7
24	4.2	3.0	2.4	1.7
36	4.0	2.9	2.3	1.7
72	3.8	2.8	2.2	1.7
144	3.6	2.8	2.2	1.7

$$B_{f36} = 2.9$$

$$B_{f72} = 2.8$$

$$B_{FE} = B_{f36} - \left(\frac{ID - 36}{72 - 36}\right)(B_{f36} - B_{f72})$$

$$B_{FE} = 2.9 - \left(\frac{48 - 36}{72 - 36}\right)(2.9 - 2.8)$$

$$B_{FE} = 2.87$$

Determine the D-Load

$$D = \left(\frac{12}{S_i}\right)\left(\frac{W_E + W_F}{B_{FE}} + \frac{W_L}{B_{FLL}}\right) \qquad (12.10.4.3.1\text{-}1)$$

$$D = \left(\frac{12}{48}\right)\left(\frac{12500 \text{ lbs/ft} + 784 \text{ lbs/ft}}{2.87} + \frac{0 \text{ lbs/ft}}{2.2}\right)$$

$D_{0.01}$ = 1157 lbs/ft/ft

ASTM C 76/AASHTO M 170 Pipe Classes

- Class I - $D_{0.01}$ = 800 lbs/ft/ft
- Class II - $D_{0.01}$ = 1000 lbs/ft/ft
- Class III - $D_{0.01}$ = 1350 lbs/ft/ft
- Class IV - $D_{0.01}$ = 2000 lbs/ft/ft
- Class V - $D_{0.01}$ = 3000 lbs/ft/ft

Fill Height Tables are based on:
1. γs = 120 pcf
2. AASHTO HL-93 live load
3. Positive Projecting Embankment Condition - this gives conservative results in comparison to trench conditions

D-Load (lb/ft/ft) for Type 2 Bedding

Class I
Class II
Class III
Class IV
Class V
Special Design

Pipe Size (in)	Fill Height in Feet													
	15	16	17	18	19	20	21	22	23	24	25	26	27	28
12	1164	1240	1317	1393	1470	1547	1623	1700	1776	1853	1929	2006	2083	2159
15	1139	1214	1289	1363	1438	1513	1587	1662	1737	1811	1886	1961	2035	2110
18	1130	1204	1278	1351	1425	1499	1573	1647	1720	1794	1868	1942	2015	2089
21	1130	1203	1277	1350	1424	1497	1570	1644	1717	1791	1864	1938	2011	2085
24	1135	1209	1282	1356	1429	1503	1576	1650	1723	1797	1870	1944	2017	2091
27	1135	1208	1282	1355	1428	1501	1574	1648	1721	1794	1867	1940	2014	2087
30	1138	1211	1284	1357	1430	1503	1576	1649	1722	1796	1869	1942	2015	2088
33	1143	1216	1289	1362	1435	1508	1581	1654	1727	1800	1874	1947	2020	2093
36	1149	1222	1295	1369	1442	1515	1588	1662	1735	1808	1881	1954	2028	2101
42	1152	1225	1298	1370	1443	1516	1589	1662	1735	1807	1880	1953	2026	2099
48	1158	1231	1303	1376	1449	1521	1594	1667	1739	1812	1885	1957	2030	2102
54	1166	1239	1311	1384	1457	1529	1602	1674	1747	1820	1892	1965	2037	2110
60	1176	1249	1321	1394	1467	1539	1612	1684	1757	1830	1902	1975	2048	2120
66	1187	1260	1332	1405	1478	1551	1623	1696	1769	1842	1914	1987	2060	2133
72	1199	1272	1345	1418	1490	1563	1636	1709	1782	1855	1928	2001	2074	2147
78	1204	1277	1350	1422	1495	1568	1640	1713	1786	1858	1931	2004	2076	2149
84	1210	1283	1355	1428	1500	1573	1645	1718	1790	1863	1935	2008	2080	2153
90	1216	1289	1361	1433	1506	1578	1650	1723	1795	1867	1940	2012	2084	2157
96	1223	1295	1367	1439	1512	1584	1656	1728	1800	1873	1945	2017	2089	2161
102	1230	1302	1374	1446	1518	1590	1662	1734	1806	1878	1950	2022	2094	2166
108	1237	1309	1381	1453	1524	1596	1668	1740	1812	1884	1956	2028	2100	2172
114	1244	1316	1388	1459	1531	1603	1675	1747	1819	1890	1962	2034	2106	2178
120	1251	1323	1395	1467	1538	1610	1682	1754	1825	1897	1969	2041	2112	2184
126	1259	1330	1402	1474	1545	1617	1689	1760	1832	1904	1975	2047	2119	2190
132	1266	1338	1410	1481	1553	1624	1696	1768	1839	1911	1982	2054	2125	2197
138	1274	1346	1417	1489	1560	1632	1703	1775	1846	1918	1989	2061	2132	2204
144	1282	1353	1425	1496	1568	1639	1711	1782	1854	1925	1996	2068	2139	2211

Table IA: Classes of Reinforced Concrete Pipe
for the Respective Diameters of Pipe and Fill Heights over the Top of the Pipe

Nominal Diameter in.	Type 1	Type 2	Type 3	Type 4	Type 5	Type 6	Type 7
	Fill Height: 3' and less 1' min cover	Fill Height: Greater than 3' not exceeding 10'	Fill Height: Greater than 10' not exceeding 15'	Fill Height: Greater than 15' not exceeding 20'	Fill Height: Greater than 20' not exceeding 25'	Fill Height: Greater than 25' not exceeding 30'	Fill Height: Greater than 30' not exceeding 35'
12	IV	II	III	IV	IV	V	V
15	IV	II	III	IV	IV	V	V
18	IV	II	III	IV	IV	V	V
21	III	II	III	IV	IV	V	V
24	III	II	III	IV	IV	V	V
30	IV	II	III	IV	IV	V	V
36	III	II	III	IV	IV	V	V
42	II	II	III	IV	IV	V	V
48	II	II	III	IV	IV	V	V
54	II	II	III	IV	IV	V	V
60	II	II	III	IV	IV	V	V
66	II	II	III	IV	IV	V	V
72	II	II	III	IV	V	V	V
78	II	II	III	IV	2020	2370	2730
84	II	II	III	IV	2020	2380	2740
90	II	II	III	1680	2030	2390	2750
96	II	III	III	1690	2040	2400	2750
102	II	III	III	1700	2050	2410	2760
108	II	III	1360	1710	2060	2410	2770

Notes: A number indicates the D-Load for the diameter and depth of fill and that a special design is required.
Design assumptions; Water filled pipe, Type 2 bedding and Class C Walls

Example
Elliptical RCP

Indirect Design Process

1. Determine pipe installation method
2. Select bedding / standard installation
3. Calculate earth load
4. Calculate live load
5. Determine bedding factors
6. Factor of safety (Service Load)
7. Select pipe strength

Example Problem

- Pipe = 38” x 60” (48” Equiv.) Elliptical Pipe
- Fill Height = 15 ft.
- Bedding = 90% Compaction of Granular Material up to Springline
- Live Load = AASHTO HL-93
- Direction of Traffic = Parallel to Span

Pipe Information

Elliptical Pipe

- Span = 60 inches
- t = 5.5 inches (ASTM C507)
- B_c = 60 + 2(5.5) = 5.92 feet

Installation Information

- Standard Installation = Type 2
  - 90% compaction of a granular material
- Soil Unit Weight - γ_s = 120 pcf
- Vertical Arching Factor – VAF = 1.40

AASHTO LRFD 12.10.2.1

Table 12.10.2.1-3 Coefficients for use with Figure 1.

	Installation Type			
	1	2	3	4
VAF	1.35	1.40	1.40	1.45
HAF	0.45	0.40	0.37	0.30
A1	0.62	0.85	1.05	1.45
A2	0.73	0.55	0.35	0.00
A3	1.35	1.40	1.40	1.45
A4	0.19	0.15	0.10	0.00
A5	0.08	0.08	0.10	0.11
A6	0.18	0.17	0.17	0.19
a	1.40	1.45	1.45	1.45
b	0.40	0.40	0.36	0.30
c	0.18	0.19	0.20	0.25
e	0.08	0.10	0.12	0.00
f	0.05	0.05	0.05	—
u	0.80	0.82	0.85	0.90
v	0.80	0.70	0.60	—

Earth Load on Pipe

$$PL = \gamma_s \times B_c \times H$$

$$W_e = VAF \times PL$$

Elliptical

PL = 120 pcf x 5.92 ft x 15 ft
PL = 10656 lbs/ft

W_e = 1.40 x 10656 lbs/ft
W_e = 14920 lbs/ft

Fluid Load

- 38” x 60” Elliptical is a 48” Circular Equivalent

$$\text{Pipe Area} = \pi \times (\text{ID}/24)^2$$

$$\text{Pipe Area} = \pi \times (48/24)^2$$

$$\text{Pipe Area} = 12.57\ \text{ft}^2$$

$$W_f = \text{Pipe Area} \times \gamma_w$$

$$W_f = 12.57\ \text{ft}^2 \times 62.4\ \text{pcf}$$

$$W_f = 784\ \text{lbs/ft}$$

From the ACPA Concrete Pipe Design Manual - Online

Illustration 5.3 Dimensions and Approximate Weights of Elliptical Concrete Pipe

ASTM C 507-Reinforced Concrete Elliptical Culvert, Storm Drain and Sewer Pipe					
Equivalent Round Size, inches	**Minor Axis, inches**	**Major Axis, inches**	**Minimum Wall Thickness, inches**	**Water-Way Area, square feet**	**Approximate Weight, pounds per foot**
18	14	23	2 3/4	1.8	195
24	19	30	3 1/4	3.3	300
27	22	34	3 1/2	4.1	365
30	24	38	3 3/4	5.1	430
33	27	42	3 3/4	6.3	475
36	29	45	4 1/2	7.4	625
39	32	49	4 3/4	8.8	720
42	34	53	5	10.2	815
48	38	60	5 1/2	12.9	1000
54	43	68	6	16.6	1235

Live Load

- H = 15 ft
- H > 8 ft
- H > ID = 5 ft
- Live load need not be considered.

Determine the Earth Load Bedding Factor

Table 12.10.4.3.2b-1—Design Values of Parameters in Bedding Factor Equation

Pipe Shape	C_A	Installation Type	C_N	Projection Ratio, p	x
Horizontal Elliptical and Arch	1.337	2	0.630	0.9	0.421
				0.7	0.369
		3	0.763	0.5	0.268
				0.3	0.148
Vertical Elliptical	1.021	2	0.516	0.9	0.718
				0.7	0.639
		3	0.615	0.5	0.457
				0.3	0.238

The value of the parameter q is taken as:

- For arch and horizontal elliptical pipe:

$$q = 0.23\frac{p}{F_e}\left(1 + 0.35p\frac{B_c}{H}\right) \qquad (12.10.4.3.2b\text{-}2)$$

- For vertical elliptical pipe:

$$q = 0.48\frac{p}{F_e}\left(1 + 0.73p\frac{B_c}{H}\right) \qquad (12.10.4.3.2b\text{-}3)$$

Use:

$p = 0.9$

Remember:

$F_e = 1.40$

$B_c = 5.92$ ft

$H = 15$ ft

$$q = 0.23\frac{0.9}{1.40}\left(1 + 0.35(0.9)\frac{5.92}{15}\right)$$

$q = 0.167$

Determine the Earth Load Bedding Factor

12.10.4.3.2b—Earth Load Bedding Factor for Arch and Elliptical Pipe

The bedding factor for installation of arch and elliptical pipe shall be taken as:

$$B_{FE} = \frac{C_A}{C_N - xq} \qquad (12.10.4.3.2b\text{-}1)$$

Table 12.10.4.3.2b-1—Design Values of Parameters in Bedding Factor Equation

Pipe Shape	C_A	Installation Type	C_N	Projection Ratio, p	x
Horizontal Elliptical and Arch	1.337	2	0.630	0.9	0.421
				0.7	0.369
		3	0.763	0.5	0.268
				0.3	0.148
Vertical Elliptical	1.021	2	0.516	0.9	0.718
				0.7	0.639
		3	0.615	0.5	0.457
				0.3	0.238

Use:

$C_A = 1.337$

$C_N = 0.630$

$x = 0.421$

Remember:

$q = 0.167$

$$B_{FE} = \frac{1.337}{0.630 - (0.421)(0.167)}$$

$B_{FE} = 2.39$

Determine the D-Load

$$D = \left(\frac{12}{S_i}\right)\left(\frac{W_E + W_F}{B_{FE}} + \frac{W_L}{B_{FLL}}\right) \qquad (12.10.4.3.1\text{-}1)$$

$$D = \left(\frac{12}{60}\right)\left(\frac{14920 \text{ lbs/ft} + 784 \text{ lbs/ft}}{2.39} + \frac{0 \text{ lbs/ft}}{2.2}\right)$$

$D_{0.01}$ = 1314 lbs/ft/ft

ASTM C 507/AASHTO M 207 Pipe Classes

- Class HE-A - $D_{0.01}$ = 600 lbs/ft/ft
- Class HE-I - $D_{0.01}$ = 800 lbs/ft/ft
- Class HE-II - $D_{0.01}$ = 1000 lbs/ft/ft
- Class HE-III - $D_{0.01}$ = 1350 lbs/ft/ft
- Class HE-IV - $D_{0.01}$ = 2000 lbs/ft/ft

Horizontal Elliptical Pipe

D-Load (lb/ft/ft) for Type 2 Bedding

Fill Height Tables are based on:
1. γ_s = 120 pcf
2. AASHTO HL-93 live load
3. Positive Projecting Embankment Condition - this gives conservative results in comparison to trench conditions
4. A projection ratio of 0.9.

Class HE-A
Class HE-I
Class HE-II
Class HE-III
Class HE-IV
Special Design

Inside Rise x Inside Span (inches)	Fill Height (feet)												
	13	14	15	16	17	18	19	20	21	22	23	24	25
14 x 23	1166	1255	1343	1431	1520	1608	1697	1785	1873	1962	2050	2139	2227
19 x 30	1152	1239	1326	1413	1500	1586	1673	1760	1847	1934	2020	2107	2194
22 x 34	1145	1231	1317	1403	1489	1575	1661	1747	1833	1919	2005	2092	2178
24 x 38	1140	1225	1311	1396	1482	1567	1653	1738	1823	1909	1994	2080	2165
27 x 42	1126	1210	1294	1378	1462	1546	1630	1714	1798	1882	1967	2051	2135
29 x 45	1149	1235	1320	1406	1492	1577	1663	1748	1834	1920	2005	2091	2177
32 x 49	1146	1231	1316	1402	1487	1572	16578	1742	1828	1913	1998	2083	2168
34 x 53	1144	1229	1314	1399	1483	1568	1653	1738	1823	1907	1992	2077	2162
38 x 60	1146	1230	1315	1399	1484	1568	1653	1737	1822	1906	1990	2075	2159
43 x 68	1145	1229	1313	1397	1481	1565	1649	1733	1817	1901	1985	2069	2153
48 x 76	1145	1229	1313	1396	1480	1563	1647	1731	1814	1898	1981	2065	2148
53 x 83	1150	1233	1317	1400	1484	1567	1651	1734	1817	1901	1984	2068	2151
58 x 91	1151	1235	1318	1401	1484	1568	1651	1734	1817	1900	1983	2067	2150
63 x 98	1157	1240	1323	1406	1489	1572	1655	1738	1822	1905	1988	2071	2154
68 x 106	1159	1242	1325	1408	1491	1574	1657	1740	1823	1905	1988	2071	2154
72 x 113	1165	1248	1331	1413	1496	1579	1662	1745	1828	1911	1993	2076	2159
77 x 121	1168	1251	1333	1416	1499	1582	1664	1747	1830	1912	1995	2078	2160
82 x 128	1170	1253	1335	1418	1500	1583	1665	1747	1830	1912	1994	2077	2159
87 x 136	1216	1253	1335	1417	1499	1581	1663	1745	1827	1909	1991	2073	2155
92 x 143	1222	1259	1341	1423	1506	1588	1670	1752	1834	1916	1998	2080	2161
97 x 151	1226	1304	1345	1427	1509	1591	1673	1755	1837	1919	2001	2083	2165
106 x 166	1237	1314	1393	1438	1520	1602	1684	1766	1847	1929	2011	2093	2175
116 x 180	1249	1327	1405	1484	1563	1614	1696	1778	1860	1942	2024	2106	2188

Table IIB: CLASSES OF REINFORCED CONCRETE ELLIPTICALL AND REINFORCED CONCRETE ARCH PIPE FOR THE RESPECTIVE EQUIVALENT ROUND SIZE OF PIPE AND FILL HEIGHTS OVER THE TOP OF PIPE

Equivalent Round Size (in.)	Reinforced Concrete Elliptical Pipe (in.)		Reinforced Concrete Arch Pipe (in.)		Minimum Cover	Type 1		Type 2		Type 3	
						Fill Height: 3' and less		Fill Height: Greater than 3' not exceeding 10'		Fill Height: Greater than 10' not exceeding 15'	
	Span	Rise	Span	Rise	RCCP HE & A	HE	Arch	HE	Arch	HE	Arch
15	23	14	18	11	1' -0"	HE-III	A-III	HE-III	A-III	HE-IV	A-IV
18	23	14	22	13 1/2	1' -0"	HE-III	A-III	HE-III	A-III	HE-IV	A-IV
21	30	19	26	15 1/2	1' -0"	HE-III	A-III	HE-III	A-III	HE-IV	A-IV
24	30	19	28 1/2	18	1' -0"	HE-III	A-III	HE-III	A-III	HE-IV	A-IV
27	34	22	36 1/4	22 1/2	1' -0"	HE-III	A-III	HE-III	A-III	HE-IV	A-IV
30	38	24	36 1/4	22 1/2	1' -0"	HE-III	A-III	HE-III	A-III	HE-IV	A-IV
36	45	29	43 3/4	26 5/8	1' -0"	HE-II	A-II	HE-III	A-III	HE-IV	A-IV
42	53	34	51 1/8	31 5/16	1' -0"	HE-I	A-II	HE-III	A-III	HE-IV	A-IV
48	60	38	58 1/2	36	1' -0"	HE-I	A-II	HE-III	A-III	1460	1450
54	68	43	65	40	1' -0"	HE-I	A-II	HE-III	A-III	1460	1460
60	76	48	73	45	1' -0"	HE-I	A-II	HE-III	A-III	1460	1470
66	83	53	88	54	1' -0"	HE-I	A-II	HE-III	A-III	1470	1480
72	91	58	88	54	1' -0"	HE-I	A-II	HE-III	A-III	1470	1480

Notes: A number indicates the D-Load for the diameter and depth of fill and that a special design is required.
Design assumptions; Water filled pipe, AASHTO Type 2 installation per AASHTO LRFD Table 12.10.2.1-1

The End